WILLIAMS CARVER CO.

REOTEMP®

INSTRUMENTS

Measuring your world since 1965™

PRESSURE & TEMPERATURE INSTRUMENTS

PTC-0218

VISIT OUR WEBSITE

REOTEMP.COM

ONLINE PRODUCT CONFIGURATORS

Pressure Gauges | Bimetal Thermometers | Dual Mode Thermometers | Thermocouples & RTDs
Thermowells | Diaphragm Seals | Differential Gauges | Sanitary RTDs | Sanitary Gauges

LIST PRICING

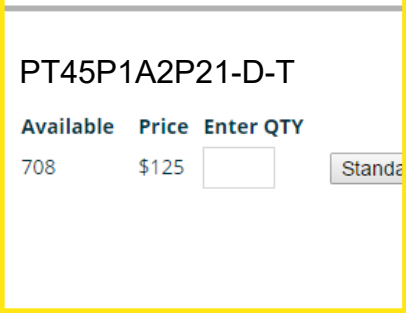

PART NUMBERS

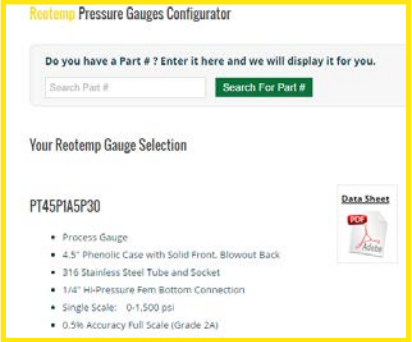

DATA SHEETS

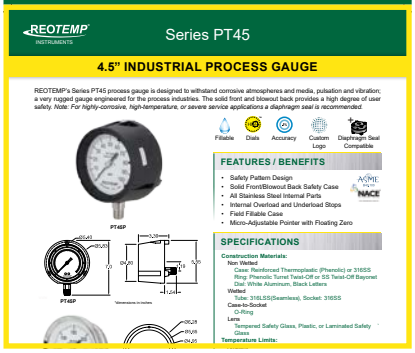

3D DRAWINGS

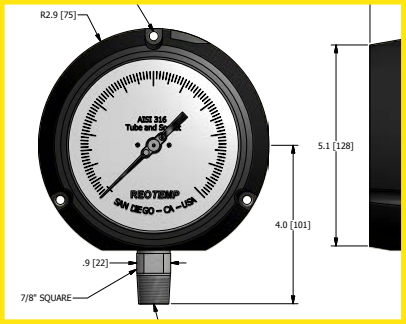

- LEAD TIME
- 3D MODELS
- CHECK STOCK
- 2D DRAWINGS
- E-MAIL QUOTES
- PRODUCT PHOTOS

"The configurator is awesome! Never worked with something so easy and user friendly and able to send pdf's of the quote. I like this!"

REOTEMP Distributor, Southeastern U.S.

"Love the Configurator, so easy to use and quick!"

REOTEMP Distributor, Southern U.S.

About Us

REOTEMP INSTRUMENTS

REOTEMP is a globally recognized ISO 9001 manufacturer of temperature and pressure instrumentation. REOTEMP sells through a mature distribution network that reaches all 50 states and 30 countries worldwide. We provide bimetal thermometers, pressure gauges, diaphragm seals, RTDs, thermocouples, pressure transmitters, compost thermometers, and related accessories to a variety of process markets worldwide.

Our reputation is built on high quality products, quick standard lead times, and exceptional customer support. We are dedicated to providing our customers with complete satisfaction, from the first phone call to the design and quality of the instrument they receive. REOTEMP provides both standard and application specific products and is ready and willing to find a solution to all of your temperature and pressure needs.

CONTACT INFORMATION

San Diego Headquarters
10656 Roselle St.
San Diego, CA 92121
United States

Houston Branch
8787 West Road, Suite 140
Houston, TX 77064
United States

Phone
U.S. (800) 648-7737
Int'l +1 (858) 784-0710
Fax (858) 784-0720

Online
sales@reotemp.com
reotemp.com

REOTEMP® INSTRUMENTS

Table of Contents

Pressure Gauges

Diaphragm Seals

Instrument Valves & Manifolds

Pressure Transmitters & Switches

Table of Contents

REOTEMP® INSTRUMENTS

Accessories

Dial Indicating Thermometers

Remote Reading Thermometers

Thermowells

REOTEMP®
INSTRUMENTS

PRESSURE GAUGES

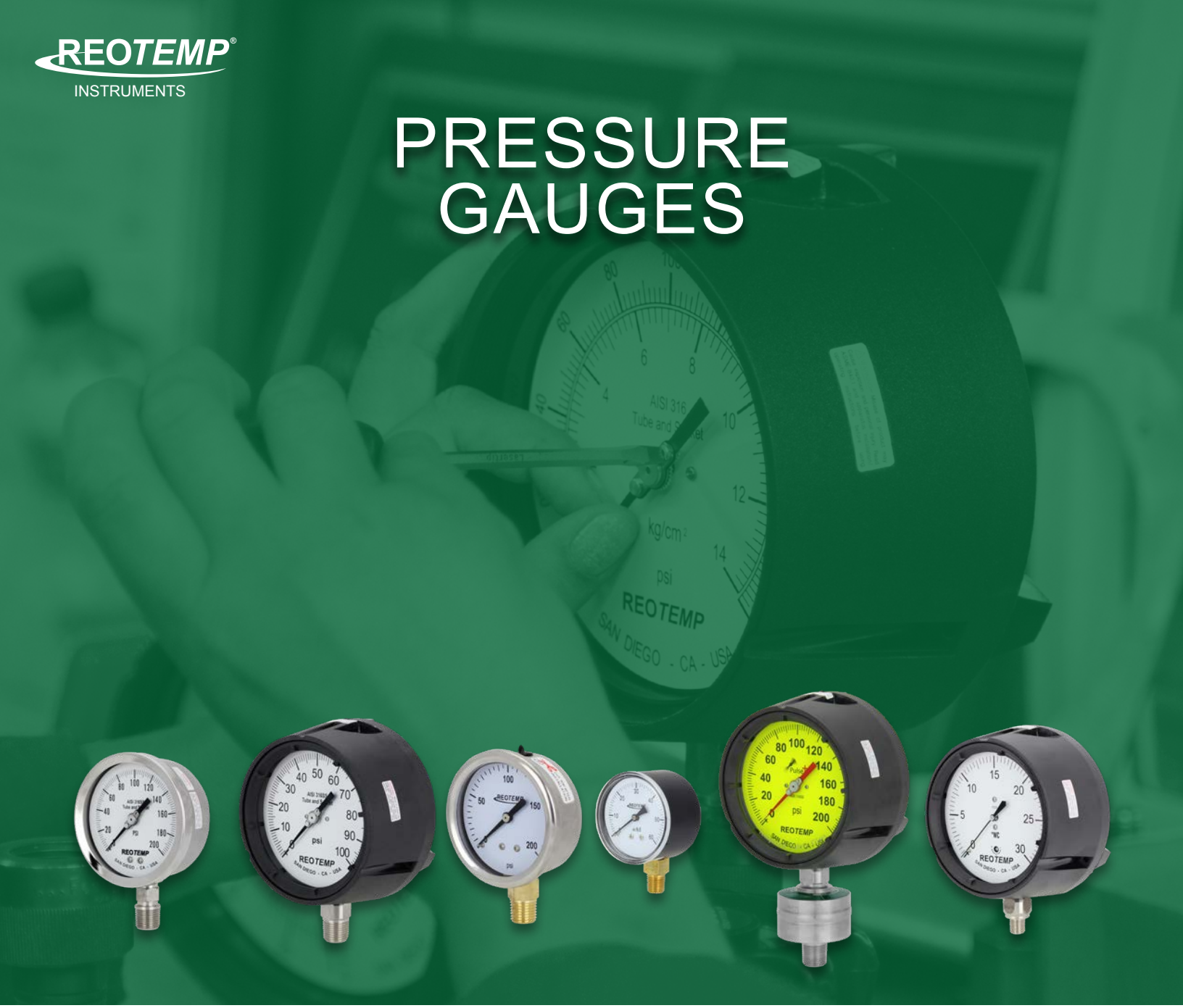

REOTEMP Pressure Gauges, manufactured under ISO 9001 quality standards, are offered in a wide variety of sizes, ranges, and configurations to meet the demands of any application. From the most rugged process gauges to the cost effective general purpose gauge, you can count on REOTEMP pressure gauges for long and reliable service.

All pressure gauge components should be selected after consideration of the pressure, temperature, media characteristics, and environmental factors. Misapplication or improper installation can cause gauge failure, which can result in damage to other equipment or personal injury. We suggest that users of pressure gauges become familiar with ASME B40.100 which is available at www.asme.org.

To ensure safety, accuracy, and gauge life, good practice requires the consideration of the following factors when selecting a pressure gauge:

1. Pressure Range

REOTEMP gauges can measure pressures from full vacuum to 30,000 psi and gauge and differential pressures as low at 10 inches of water column. Generally, a range of twice the working pressure is recommended with a maximum working pressure not to exceed 75% of scale. If pulsation occurs or media temperature is elevated, then working pressure should be at or below 50% of scale.

Most bourdon tube and capsule gauges can see momentary spikes of 130% of scale without permanent damage to the gauge (see data sheets for specific max working pressure). Information on gauge burst pressure is available under the "Resources" tab at reotemp.com

2. Process Media

All pressure gauge wetted components should be selected to suit the characteristics of the fluid being measured. Consider the following process media characteristics:

Temperature – Specific temperature limits are stated on the gauge data sheets. For media temperatures beyond the gauge limits a diaphragm seal or cooling element should be considered. For steam service a pigtail siphon should be used.

Corrosion – All wetted materials of the pressure gauge are noted on the data sheet. If the process fluid is not compatible with those materials then another gauge should be selected or a diaphragm seal should be installed.

Clogging – The pressure gauge socket and bourdon tube have small orifices that will clog in the presence of solids or high viscosity fluids. A diaphragm seal is recommended for these applications.

Pulsation – A mechanical pressure gauge is uniquely susceptible to the damaging effects of pulsation in a process. Most REOTEMP pressure gauges have restrictor screws (throttle plugs) installed in order to dampen some pulsation. Snubbers can be used to further dampen some types of pulsation. A diaphragm seal with the PulsePlus™ feature is recommended for severe applications.

3. Environmental Factors

The case style, material, and design of the pressure gauge should be selected to suit the environment of the gauge installation. The environmental factors to consider include:

Vibration – Mechanical pressure gauge components are highly susceptible to vibration. Liquid filling of the case is recommended in most applications where vibration exists. In cases of severe vibration the gauge may need to be remotely mounted using flexible capillary tubing with or without a diaphragm seal.

Ambient Temperatures – Most REOTEMP pressure gauges are rated for normal ambient temperatures for outdoor installations in most parts of the globe (-40 to 140°F). If the gauge is liquid filled, care should be taken in selecting the right fill fluid for the ambient conditions.

Moisture and Corrosion – The presence of moisture, wash-down chemicals, salt water, and other environmental factors should be considered when selecting case style and material. In high humidity environments, liquid filling the case will avoid condensation buildup on the inside of the lens.

4. Accuracy

REOTEMP pressure gauges are available in accuracies ranging from 0.25% (ASME Grade 3-A) to +/- 3/2/3% (ASME Grade B). As a general rule, 1% or better gauges are used in critical process and require more costly components and larger dial sizes. All REOTEMP pressure gauges are calibrated to the stated accuracy at the time of manufacture; further certification and logging of point data can be provided on NIST traceable reference equipment.

5. Connection Size and Mounting

Most REOTEMP gauges come standard with ¼" or ½" Male NPT process connections. Many other connection types are available including BSP, coned high pressure fittings, SAE, tube stub, VCR, and more.

The following mounting methods are most common for pressure gauges:

- **Bottom Mount** (stem mount)
- **Rear Mount** (lower back or center back connection based on model)
- **Wall Mount** (includes a back flange attached to the gauge)
- **Panel Mount** (includes a front flange or u-clamp attached to the gauge)

6. Dial Selection

REOTEMP pressure gauges are available in dial sizes ranging from 1.5" to 6". Typically, space consideration, accuracy, and readability are the driving factors behind dial size selection. For pressure gauges being installed into low-light or difficult to read environments, a Hi-Vis™ dial is recommended. Color bands, dual scales, tag numbers, and custom text are other options when selecting a pressure gauge for a specific application.

HEAVY-DUTY REPAIRABLE STAINLESS GAUGE

REOTEMP's Series PR gauge offers rugged, all-welded stainless steel construction ideal for heavy-duty industrial applications. The stainless steel case, tube and socket are welded together for superior case sealing and gauge integrity. The twist-off bayonet ring offers easy access for field repair and calibration services. Liquid filling (at the factory or in the field) is recommended for applications involving vibration.

PR25

PR35

Fillable | Dials | Custom Logo | Diaphragm Seal Compatible

FEATURES / BENEFITS

- All-Welded Stainless Steel Construction
- Removable Bayonet Ring with Adjustable Pointer
- Field Fillable Case, NEMA 4X/IP65
- Rugged, Long-Lasting Design

ASME B40.100 NACE INTERNATIONAL

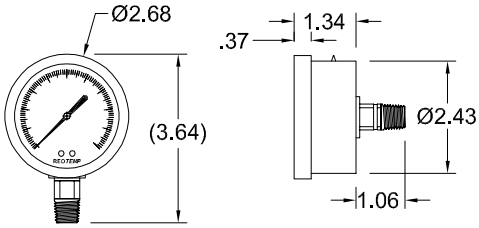

PR25

*dimensions in inches

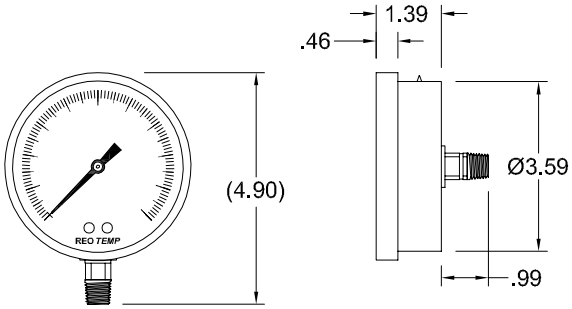

PR35

*dimensions in inches

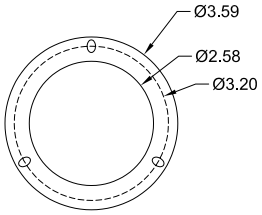

PR25 Mounting Flange

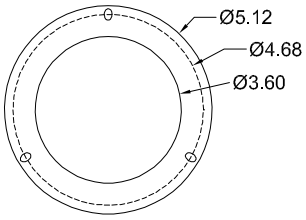

PR35 Mounting Flange

SPECIFICATIONS

Accuracy	2 - 1 - 2%, ASME Grade A (2% up, 4% down for 10,000 psi and higher).
Ambient Limits	-40°F/150°F
Process Limits	-40°F/250°F
Process Limits with Diaphragm Seal	-60°F/400°F (Direct Mount)* -110°F/750°F (Remote Mount or Cooling Tower)* *Exact limits depend on diaphragm seal and fill fluids.
Wetted Materials	Tube: 316SS Seamless Socket: 316SS
Lens	Tempered Safety Glass , Plastic or Laminated Safety Glass
Other Materials	Case: 304SS Ring: 304SS Twist-Off Bayonet Dial: White Aluminum with Black Letters Case-Socket: Welded
Fillable	Yes
Restrictor Screw	Yes, removable.
Maximum Working Pressure	Stable = 100% Momentary = 130% of scale
Environmental Protection	NEMA 4X/IP65
Weight	2.5" = 0.4 lbs (0.6 lbs filled), 3.5" = 0.7 lbs (1.0 lbs filled)

HEAVY-DUTY REPAIRABLE STAINLESS GAUGE

Visit reotemp.com

- ✓ Check Stock
- ✓ Configure Part #
- ✓ Get Price
- ✓ Download PDF Data Sheets

HOW TO ORDER: Choose options to build a part number. For example: PR25S1A4P18-D-P-MP

PR25	S	1	A	4	P18	-D	-P	-MP
DIAL SIZE	CASE TYPE	TUBE & SOCKET	MOUNT TYPE	CONNECTION	RANGE CODE	CASE FILL	LENS	OPTIONS
PR25 = 2.5” **PR35** = 3.5”	**S** = 304SS ***T** = 316SS	**1** = 316SS ***3** = Monel	**A** = Bottom **B** = Bottom/Rear Flange **C** = Center Back **D** = Center Back “U” Clamp **E** = Center Back/Front Flange	**4** = 1/4” NPT ***8** = 1/8” NPT **2** = 1/2” NPT (PR35 ONLY) ***M** = 1/4” Tube Fitting	*Common Ranges* **P01** = -30 inHg-0 psi **P03** = -30 inHg-0-30 psi **P16** = 0-30 psi **P18** = 0-100 psi **P20** = 0-200 psi **P21** = 0-300 psi **P25** = 0-1,000 psi **P34** = 0-5,000 psi *Available Ranges* ■ Vac to 15,000 PSI ■ Gauge Pressure, Vac or Compound ■ Lowest Range = 10 psi *For Additional Range Codes See Page 45*	**-D** = Dry **-G** = Glycerin **-S** = Silicone **-W** = Glycerin/ Water (65/35) **-I** = Inert	**-T** = Tempered Safety Glass (std. on 3.5”) **-P** = Plastic (std. on 2.5”) **-S** = Laminated Safety Glass	**-MP** = Max. Pointer (Available on 2.5” ONLY) **-C3** = 3 Point Calibration Certificate **-R1** = 1% Full Scale Accuracy **-HV** = Hi-Vis™ Dial **-NC** = NACE Compliance Certificate **-PM** = Positive Material Identification Certification

*Non-standard Configuration

Diaphragm Seal Suitability Guide

For applications where a diaphragm seal is required, the following diaphragm seal model types are most commonly assembled and filled to Series PR25/35 pressure gauges. This matrix identifies which diaphragm seal is appropriate based on the specified pressure range. Please reference the diaphragm seal data sheet and seal fill fluid guide for additional application considerations including max pressure, temperature limits, and material compatibility.

Diaphragm Seal Model		Total Gauge Span* (in psi)							
		15	30	45	60	75	100	160	200 +
Mini Seals	MS4	T	T	T					
	MS6	T							
	MS8								
Threaded Flush	1/2”	X	S	S	T	T	T	T	
	3/4”	X	T	T	T	T	T		
	1”	T	T	T					
	1.5”								
Offline	W5								
	T5								
Sanitary	3/4” TC	X	S	S	T	T	T	T	
	1.5” TC	T	T						
	2” TC								

*Total gauge span is additive of negative and positive pressures.

Example: -15 - 0 - 30 psi = 45 psi span

- Assembly will function correctly with minimal accuracy degradation.
- T — Assembly will function correctly given stable temperature.
- S — Assembly is highly sensitive to orientation and temperature variance. REOTEMP cannot guarantee a stated accuracy.
- X — Assembly will not work. The diaphragm does not displace enough fill fluid to drive the pressure gauge.

PR25S1A4P18-D-P
MS4G4F4XS-DTD-AS

HEAVY-DUTY REPAIRABLE STAINLESS GAUGE

REOTEMP's Series PR gauge offers rugged, all-welded stainless steel construction ideal for heavy-duty industrial applications. The stainless steel case, tube and socket are welded together for superior case sealing and gauge integrity. The twist-off bayonet ring offers easy access for field repair and calibration services. Liquid filling (at the factory or in the field) is recommended for applications involving vibration. For high-corrosive, high-temp, or severe service applications, a diaphragm seal is recommended.

PR40

PR60

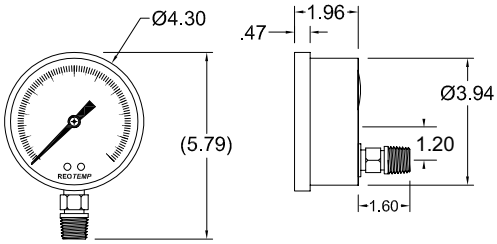

PR40

*dimensions in inches

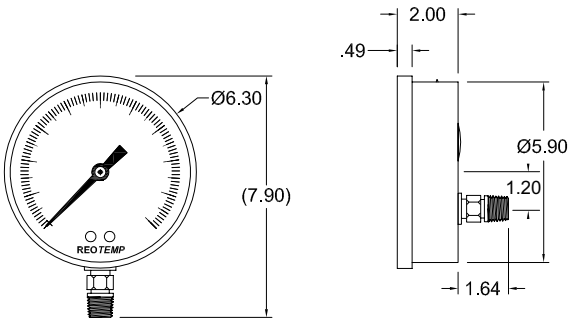

PR60

*dimensions in inches

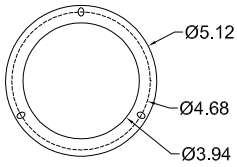

PR40 Mounting Flange

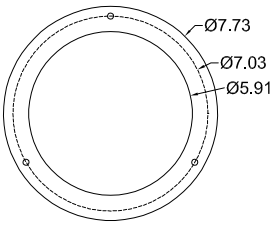

PR60 Mounting Flange

Fillable

Dials

Accuracy

Custom Logo

Diaphragm Seal Compatible

FEATURES / BENEFITS

- All-Welded Stainless Steel Construction
- Removable Bayonet Ring, Micro Adjustable Pointer
- Field Fillable Case, NEMA 4X/IP65
- Internal Overload and Underload Stops, Floating Zero
- Safety Blow-Out Relief

ASME B40.100 NACE INTERNATIONAL

SPECIFICATIONS

Accuracy	1%, ASME Grade 1A (10K to 20K ; 2% Upscale, 4% Downscale)
Ambient Limits	-40°F/150°F
Process Limits	-40°F/250°F
Process Limits with Diaphragm Seal	-60°F/400°F (Direct Mount)* -110°F/750°F (Remote Mount or Cooling Tower)* *Exact limits depend on diaphragm seal and fill fluids.
Wetted Materials	Tube: 316SS Seamless Socket: 316SS
Lens	Tempered Safety Glass , Plastic or Laminated Safety Glass
Other Materials	Case: 304SS Ring: 304SS Twist-Off Bayonet Dial: White Aluminum with Black Letters Case-Socket: Welded
Fillable	Yes
Restrictor Screw	Yes, removable.
Maximum Working Pressure	Stable = 100% Momentary = 130% of scale
Environmental Protection	NEMA 4X/IP65
Weight	4" = 1.3 lbs (2.0 lbs filled), 6" = 2.1 lbs (4.2 lbs filled)

HEAVY-DUTY REPAIRABLE STAINLESS GAUGE

Visit reotemp.com

- ✓ Check Stock
- ✓ Get Price
- ✓ Configure Part #
- ✓ Download PDF Data Sheets

HOW TO ORDER: Choose options to build a part number. For example: PR40S1A4P01-D-T-HV

PR40	S	1	A	4	P01	-D	-T	-HV
DIAL SIZE	CASE TYPE	TUBE & SOCKET	MOUNT TYPE	CONNECTION	RANGE CODE	CASE FILL	LENS	OPTIONS
PR40 = 4” **PR60** = 6”	**S** = 304SS ***T** = 316SS	**1** = 316SS ***3** = Monel	**A** = Bottom **B** = Bottom/Rear Flange **C** = Lower Back **D** = Lower Back “U” Clamp **E** = Lower Back/Front Flange **F** = Lower Back/Rear Flange	**4** = 1/4” NPT **2** = 1/2” NPT **5** = 1/4” Female High Pressure (9/16” - 18 UNF)	*Common Ranges* **P01** = -30 inHg-0 psi **P03** = -30 inHg-0-30 psi **P16** = 0-30 psi **P18** = 0-100 psi **P20** = 0-200 psi **P21** = 0-300 psi **P25** = 0-1,000 psi **P34** = 0-5,000 psi *Available Ranges* ■ Vac to 20,000 psi ■ Gauge Pressure, Vacuum, or Compound ■ Lowest Range = 10 psi *Available Units:* ■ psi (std) ■ bar ■ kPa ■ kg/cm^2 ■ ft H_2O ■ & more *For Additional Range Codes See Page 45*	**-D** = Dry **-G** = Glycerin **-S** = Silicone **-W** = Glycerin/ Water (65/35) **-I** = Inert	**-T** = Tempered Safety Glass (std) **-P** = Plastic **-S** = Laminated Safety Glass	**-HV** = Hi-Vis™ Dial **-C3** = 3 pt. Calibration Certificate **-OX** = Cleaned for O_2 Service **-TS** = Stainless Steel Tag **-MP** = Max. Pointer **-EC** = Electrical Contacts (4" Case Only) **-P6** = Pointer Stop at 6 O’clock **-R2** = .5% Full Scale Accuracy **-NC** = NACE Compliance Certificate **-PM** = Positive Material Identification Certification

*Non-standard Configuration

Diaphragm Seal Suitability Guide

For applications where a diaphragm seal is required, the following diaphragm seal model types are most commonly assembled and filled to Series PR40/60 pressure gauges. This matrix identifies which diaphragm seal is appropriate based on the specified pressure range. Please reference the diaphragm seal data sheet and seal fill fluid guide for additional application considerations including max pressure, temperature limits, and material compatibility.

Diaphragm Seal Model		Total Gauge Span* (in psi)						
		15	30	45	60	75	100	160+
Mini Seals	MS6	X	S	T	T	T		
	MS8	T	T	T				
Threaded Flush	1”	X	X	X	S	T	T	
	1.5”	T	T	T	T			
Offline	W5	S	T	T				
	W6	T						
	W7/T5/V5							
Sanitary	1.5” TC	X	X	X	T	T	T	
	2” TC	S	T	T				

*Total gauge span is additive of negative and positive pressures.

Example: -15 - 0 - 30 psi = 45 psi span

- (blank) — Assembly will function correctly with minimal accuracy degradation.
- T — Assembly will function correctly given stable temperature.
- S — Assembly is highly sensitive to orientation and temperature variance. REOTEMP cannot guarantee a stated accuracy.
- X — Assembly will not work. The diaphragm does not displace enough fill fluid to drive the pressure gauge.

4.5” INDUSTRIAL PROCESS GAUGE

REOTEMP’s Series PT45 process gauge is designed to withstand corrosive atmospheres and media, pulsation and vibration; a very rugged gauge engineered for the process industries. The solid front and blowout back provides a high degree of user safety. *Note: For highly-corrosive, high-temperature, or severe service applications a diaphragm seal is recommended.*

PT45P

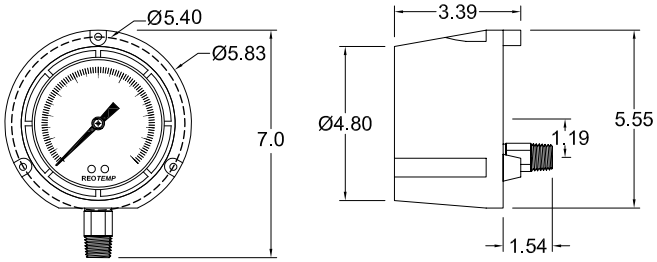

PT45P

*dimensions in inches

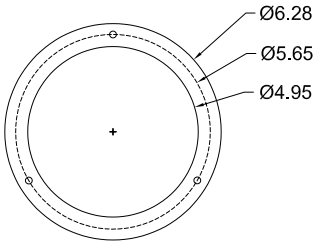

PT45T Mounting Flange

PT45T

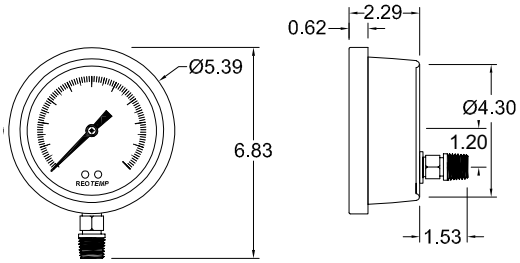

PT45T

*dimensions in inches

Fillable | Dials | Accuracy | Custom Logo | Diaphragm Seal Compatible

FEATURES / BENEFITS

- Safety Pattern Design
- Solid Front/Blowout Back Safety Case
- All Stainless Steel Internal Parts
- Internal Overload and Underload Stops
- Field Fillable Case
- Micro-Adjustable Pointer with Floating Zero

ASME B40.100

NACE INTERNATIONAL THE CORROSION SOCIETY

SPECIFICATIONS

Accuracy	±0.5%, Grade 2A (10k - 20k psi = 1% upscale, 2% downscale)
Ambient Limits	-40°F/150°F
Process Limits	-40°F/250°F
Process Limits with Diaphragm Seal	-60°F/400°F (Direct Mount)* -110°F/750°F (Remote Mount or Cooling Tower)* *Exact limits depend on diaphragm seal and fill fluids.
Wetted Materials	Tube: 316SS Seamless Socket: 316SS
Lens	Tempered Safety Glass (Standard), Plastic or Laminated Safety Glass
Other Materials	Case: Reinforced Thermoplastic (Phenolic) or 316SS Ring: Phenolic Turret Twist-Off or SS Twist-Off Bayonet Dial: White Aluminum, Black Letters, Case-to-Socket: O-Ring
Fillable	Yes
Restrictor Screw	Yes, removable.
Maximum Working Pressure	Stable = 100% Momentary = 130% of scale
Environmental Protection	NEMA 4X/IP65
Weight	Phenolic (Dry) = 2.5 lbs Phenolic (Filled) = 3.5 lbs SS (Dry) = 2 lbs SS (Filled) = 3 lbs

4.5” INDUSTRIAL PROCESS GAUGE

Visit reotemp.com

- ✓ Check Stock
- ✓ Configure Part #
- ✓ Get Price
- ✓ Download PDF Data Sheets

HOW TO ORDER: Choose options to build a part number. For example: PT45P1A2P21-D-T-HV

PT45	P	1	A	2	P21	-D	-T	-HV
DIAL SIZE	**CASE TYPE**	**TUBE & SOCKET**	**MOUNT TYPE**	**CONNECTION**	**RANGE CODE**	**CASE FILL**	**LENS**	**OPTIONS**
PT45 = 4.5”	**P** = Fiberglass Reinforced Thermo-plastic **T** = 316SS, Bayonet Ring	**1** = 316SS ***3** = Monel	**A** = Bottom **C** = Lower Back **E** = Lower Back / Front Flange (316SS case Only)	**2** = 1/2” NPT **4** = 1/4” NPT **5** = 1/4” Female High Pressure (9/16” - 18 UNF) **3** = 3/4” NPT	*Common Ranges* **P01** = -30 inHg-0 psi **P03** = -30 inHg-0-30 psi **P16** = 0-30 psi **P18** = 0-100 psi **P20** = 0-200 psi **P21** = 0-300 psi **P25** = 0-1,000 psi **P34** = 0-5,000 psi *Available Ranges* ■ Vac to 20,000 psi ■ Gauge Pressure, Vacuum, or Compound ■ Lowest Range = 10 psi *Available Units* ■ psi ■ bar ■ kPa ■ kg/cm^2 ■ ftH$_2$0 ■ & more *For Additional Range Codes See Page 45*	**-D** = Dry **-G** = Glycerin **-T** = Dry, Teflon Coated Movement **-W** = Glycerin/ Water (65/35) **-S** = Silicone **-I** = Inert	**-T** = Tempered Safety Glass (std) **-P** = Plastic **-S** = Laminated Safety Glass	**-HV** = Hi-Vis™ Dial **-C3** = 3 pt. Calibration Certificate **-OX** = Cleaned for O_2 Service **-TS** = Stainless Steel Tag **-MP** = Max. Pointer **-EC** = Electrical Contacts** **-P6** = Pointer Stop at 6 O’clock **-FM** = Flush Mount Ring for Phenolic Case **-NC** = NACE Compliance Certificate **-PM** = Positive Material Identification Certification

*Non-standard Configuration
**Phenolic Case Only

Diaphragm Seal Suitability Guide

For applications where a diaphragm seal is required, the following diaphragm seal model types are most commonly assembled and filled to Series PT45 pressure gauges. This matrix identifies which diaphragm seal is appropriate based on the specified pressure range. Please reference the diaphragm seal data sheet and seal fill fluid guide for additional application considerations including max pressure, temperature limits, and material compatibility.

Diaphragm Seal Model		Total Gauge Span* (in psi)						
		15	30	45	60	75	100	160+
Mini Seals	MS6	X	S	T	T	T		
	MS8	S	T	T				
Threaded Flush	1”	X	X	X	S	S	T	
	1.5”	S	S	T	T			
Offline	W5	S	T	T				
	W6	T						
	T5	S	T					
	W7/V5							

*Total gauge span is additive of negative and positive pressures.

Example: -15 - 0 - 30 psi = 45 psi span

- (no rating) Assembly will function correctly with minimal accuracy degradation.
- T Assembly will function correctly given stable temperature.
- S Assembly is highly sensitive to orientation and temperature variance. REOTEMP cannot guarantee a stated accuracy.
- X Assembly will not work. The diaphragm does not displace enough fill fluid to drive the pressure gauge.

PT45P1A2L21-D-T
W51522SSS-TTDTD-AS

ALL-WELDED PROCESS SEAL GAUGE

REOTEMP's All-Welded Pressure Seal Gauge offers superior diaphragm seal safety and performance at an economical price. Combined with a gauge or transmitter, the tamper-resistant all-welded diaphragm seal reduces potential leak points, making it ideal for installations where process integrity and worker safety are paramount. Combined with PulsePlus™ protection, the Series MS8 can potentially triple the life of your gauge or transmitter.

MS8P2 MS8P4 MS8PT

Fillable Dials Custom Logo

FEATURES / BENEFITS

- Increases the Life of the Gauge by Up to 3x
- Reduce/Eliminate Fugitive Emissions
- Available Up to 5,000 psi
- Eliminate Potential Leak Points
- Tamper Resistant
- Compliant to NACE MR0175, MR0103

ASME B40.100 NACE

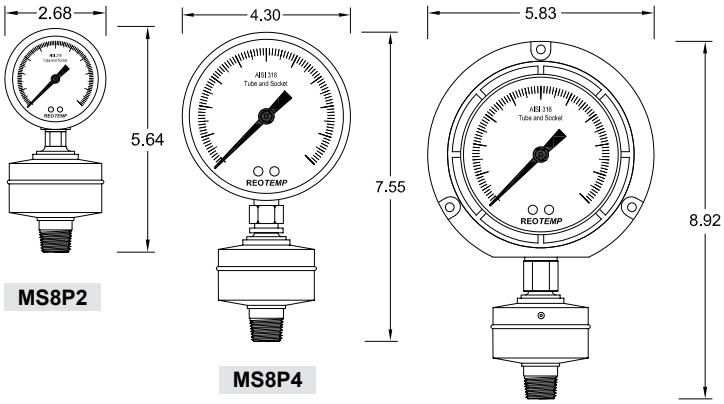

All drawings depict a 1/2" NPT Male process connection. See online configurator for specific assembly drawings.

SPECIFICATIONS

Accuracy	With appropriate pressure range, seal gauge accuracy is gauge accuracy plus 0.5%. (May be subject to thermal error. Consult factory with questions.)
Ambient Limits	-40°F/150°F
Process Limits with Diaphragm Seal	-40°F/400°F (Direct Mount)* -110°F/750°F (Remote Mount or Cooling Tower)* *Exact limits depend on diaphragm seal and fill fluids.
Wetted Materials	Diaphragm, Lower and Process Connection: 316LSS or Hast. C-276 Gasket: None
Lens	Tempered Safety Glass , Plastic or Laminated Safety Glass
Other Materials	Upper Housing: 316SS
Fillable	Yes
Maximum Working Pressure	See table left.
Environmental Protection	NEMA 4X/IP65
Weight	0.6 lbs (Seal Only)

DIAPHRAGM SEAL MAX WORKING PRESSURE (AT 100°F)

		316SS	Hast. C-276	Monel
Male	1/4" NPT	5,000 psi	2,000 psi	2,000 psi
	1/2" NPT	5,000 psi	2,000 psi	2,000 psi
	3/4" NPT	2,000 psi	n/a	n/a
	1" NPT	1,000 psi	n/a	n/a
Female	1/4" NPT	2,500 psi	n/a	n/a
	1/2" NPT	2,500 psi	n/a	n/a

Note: Maximum working pressure is lesser of proof pressure and 130% of gauge range.

ALL-WELDED PROCESS SEAL GAUGE

Visit reotemp.com

- ✓ Check Stock
- ✓ Get Price
- ✓ Configure Part #
- ✓ Download PDF Data Sheets

HOW TO ORDER: Choose options to build a part number. For example: MS8PTAM3XP23-SDDDASPGT-HV

MS8PT — PRESSURE INSTRUMENT

Solid Front/ Blowout Back Process Gauges
MS8PT = 4.5" Phenolic Process
MS8PS = 4.5" Stainless Safety Gauge

Industrial All Stainless Steel Gauges
MS8P6 = 6" SS
MS8P4 = 4" SS
MS8P3 = 3.5" SS
MS8P2 = 2.5" SS

Hinged-Ring Process Gauge
MS8PI = 4.5" Aluminum Case, SS internals

A — GAUGE MOUNT

A = Bottom

C = Back (4", 4.5", 6")
Lower Back (2.5", 3.5")
Center Back

E = Back/ Front Flange (Panel Mount) (4", 4.5", 6")
Lower Back (2.5", 3.5")
Center Back

M3 — PROCESS CONNECTION

Threaded
M2 = 1/2" male NPT
M4 = 1/4" male NPT
M3 = 3/4" male NPT
M1 = 1" male NPT
F2 = 1/2" female NPT
F4 = 1/4" female NPT
F3 = 3/4" female NPT

Flanged
R11 = 1"x150#RF
R13 = 1"x300#RF
RH1 = 1.5"x150#RF
RH3 = 1.5"x300#RF

X — FLUSH CONNECTION

X = No Flush
F = Single 1/4" Flush (Ships with Plug Installed)

P23 — PRESSURE RANGE

Common Ranges
P03 = -30"inHg/0/30 psi
P15 = 15 psi
P16 = 30 psi
P17 = 60 psi
P18 = 100 psi
P20 = 200 psi
P21 = 300 psi
P22 = 400 psi
P23 = 600 psi
P25 = 1,000 psi
P31 = 2,000 psi
P32 = 3,000 psi
P34 = 5,000 psi

Available Ranges
- 15 psi to 6,000 psi
- Gauge Pressure, Vacuum, or Compound

Standard Units
- psi
- psi/bar

Note: Minimum Span for 4" Gauges and Greater is 30 psi

For Additional Range Codes See Page 45

-S — WETTED MATERIAL

-S = 316L SS
-H = Hast. C-276
-M = Monel 400†

Note: see maximum working pressure table on previous page for available process connections.

†Furnished with Monel upper housing.

DDD — SEAL MOUNTING

DDD = Direct
RTR = Cooling Tower
B?? = Armored 316 SS Capillary (5-40 ft.)
W?? = PVC Coated Armored 316 SS Capillary
Note: ?? = Length in feet (e.g. 05 = 5 feet)

Note: Capillary connection is welded unless otherwise specified.

AS — SEAL FILL

AS = Silicone DC200
AG = Glycerin
C1 = Fomblin Y06
BH = Silicone DC704
C2 = Halocarbon 6.3

See 58 for Complete Fill Guide

P — PULSATION PROTECTION

X = None
P = Pulse Plus™ (Pulsation Protection)

G — CASE FILL

D = Dry
G = Glycerin
W = Glycerin Water (65/35)
S = Silicone
I = Inert

Note: MS8PI is not fillable.

T — LENS

T = Tempered Safety Glass
S = Laminated Safety Glass
P = Plastic

-HV — OPTIONS

-HV = Hi-Vis™ Dial
-C3 = 3 Point Calibration Certificate
-TS = Stainless Steel Tag
-OX = Cleaned for O_2 Service
-CN = NACE Certificate
-PM = Positive Material Identification Certification
-MM = Monel Wetted Gauge

See Pages 50 & 83 for Additional Options

HINGE-FRONT INDUSTRIAL PROCESS GAUGE

REOTEMP's Series PI45 process gauge is designed to withstand corrosive atmospheres and media, ideal for panel builders in the heavy-industrial markets. The hinge-front case allows for easy access to the gauge dial while still panel mounted.

PI

Dials | Accuracy | Custom Logo | Diaphragm Seal Compatible

FEATURES / BENEFITS

- All Stainless Steel Internal Parts
- Internal Overload and Underload Stops
- Micro-Adjustable Pointer with Floating Zero
- Hinge-Front Case for Easy Recalibration

ASME B40.100 NACE

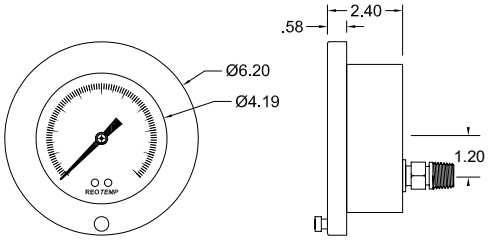

PI45

*dimensions in inches

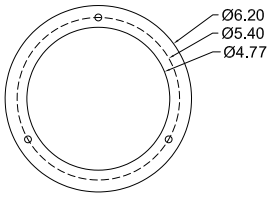

Integrated PI45 Mounting Flange

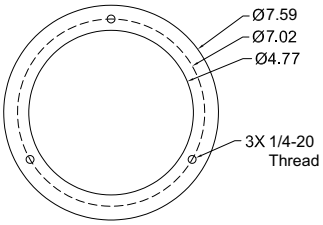

Integrated PI60 Mounting Flange

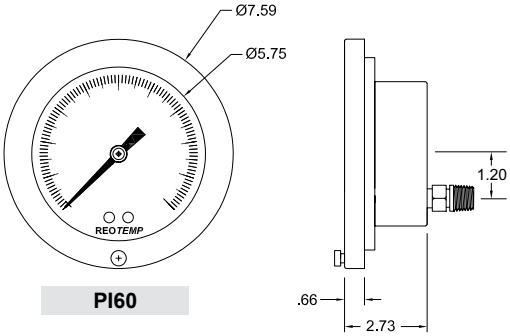

PI60

*dimensions in inches

SPECIFICATIONS

Accuracy	±0.5%, ASME Grade 2A, (10k-20k psi, 1% upscale and 3% downscale)
Ambient Limits	-40°F/150°F
Process Limits	-40°F/250°F
Process Limits with Diaphragm Seal	-60°F/400°F (Direct Mount)* -110°F/750°F (Remote Mount or Cooling Tower)* *Exact limits depend on diaphragm seal and fill fluids.
Wetted Materials	Tube: 316SS Seamless Socket: 316SS
Lens	Glass (Standard on 6") Plastic (Standard on 4.5")
Other Materials	Case: Black Painted Aluminum Ring: Black Painted Aluminum Dial: Aluminum Case-to-Socket: O-Ring, Vented
Fillable	No
Restrictor Screw	Yes
Maximum Working Pressure	Stable = 100% Momentary = 130% of scale
Weight	2.5 lbs

HINGE-FRONT INDUSTRIAL PROCESS GAUGE

Visit reotemp.com

- ✓ Check Stock
- ✓ Configure Part #
- ✓ Get Price
- ✓ Download PDF Data Sheets

HOW TO ORDER: Choose options to build a part number. For example: PI45H1E2P16-D-P-HV

PI45	H	1	E	2	P16	-D	-P	-HV
DIAL SIZE	CASE TYPE	TUBE & SOCKET	MOUNT TYPE	CONNECTION	RANGE CODE	CASE FILL	LENS	OPTIONS
PI45 = 4.5” ***PI60** = 6”	**H** = Black Painted Aluminum, Hinge- Front	**1** = 316SS ***3** = Monel	**E** = Lower Back/Front Flange	**2** = 1/2” NPT **4** = 1/4” NPT	*Common Ranges* **P01** = -30 inHg-0 psi **P03** = -30 inHg-0-30 psi **P16** = 0-30 psi **P18** = 0-100 psi **P20** = 0-200 psi **P21** = 0-300 psi **P25** = 0-1,000 psi **P34** = 0-5,000 psi *Available Ranges* ■ Vac to 20,000 psi ■ Gauge Pressure, Vacuum, or Compound ■ Lowest Range = 10 psi *Available Units* ■ psi ■ bar ■ kPa ■ kg/cm^2 ■ ft$H_2$0 ■ & more *For Additional Range Codes See Page 45*	**-D** = Dry *Case is not fillable.*	**-P** = Plastic **-G** = Glass	**-HV** = Hi-Vis™ Dial **-C3** = 3 pt. Calibration Certificate **-OX** = Cleaned for O_2 Service **-NC** = NACE Compliance Certificate **-PM** = Positive Material Identification Certification

*Non-standard configuration

Diaphragm Seal Suitability Guide

For applications where a diaphragm seal is required, the following diaphragm seal model types are most commonly assembled and filled to Series PI45 pressure gauges. This matrix identifies which diaphragm seal is appropriate based on the specified pressure range. Please reference the diaphragm seal data sheet and seal fill fluid guide for additional application considerations including max pressure, temperature limits, and material compatibility.

Diaphragm Seal Model		Total Gauge Span* (in psi)						
		15	30	45	60	75	100	160+
Mini Seals	MS6	X	S	T	T	T		
	MS8	S	T	T				
Threaded Flush	1”	X	X	X	S	S	T	
	1.5”	S	S	T	T			
Offline	W5	S	T	T				
	W6	T						
	T5	S	T					
	W7/V5							

*Total gauge span is additive of negative and positive pressures.

Example: -15 - 0 - 30 psi = 45 psi span

- (green) Assembly will function correctly with minimal accuracy degradation.
- T — Assembly will function correctly given stable temperature.
- S — Assembly is highly sensitive to orientation and temperature variance. REOTEMP cannot guarantee a stated accuracy.
- X — Assembly will not work. The diaphragm does not displace enough fill fluid to drive the pressure gauge.

ALL STAINLESS STEEL LOW PRESSURE GAUGE

REOTEMP's Series PC low pressure gauges offer accurate and reliable measurements of gaseous media. Offered with stainless steel internals, the Series PC is designed to withstand corrosive media and ensure a long-lasting instrument.

PC25S1 PC40S1 PC60S1

Dials Custom Logo Diaphragm Seal Compatible

FEATURES / BENEFITS

- Sensitive Diaphragm/Capsule Mechanism
- All-Welded 316 Stainless Steel Capsule and Socket
- Easy-Access Zero Reset Screw on Dial

ASME B40.100 NACE

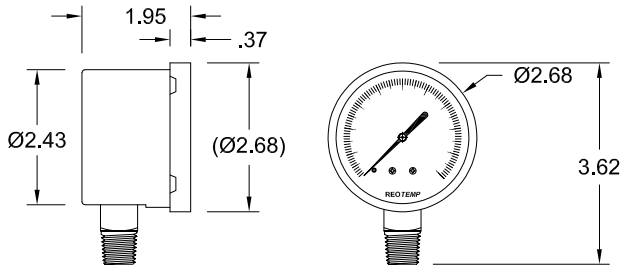

PC25S1

*dimensions in inches

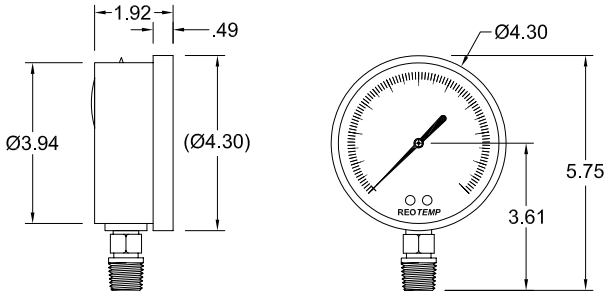

PC40S1

*dimensions in inches

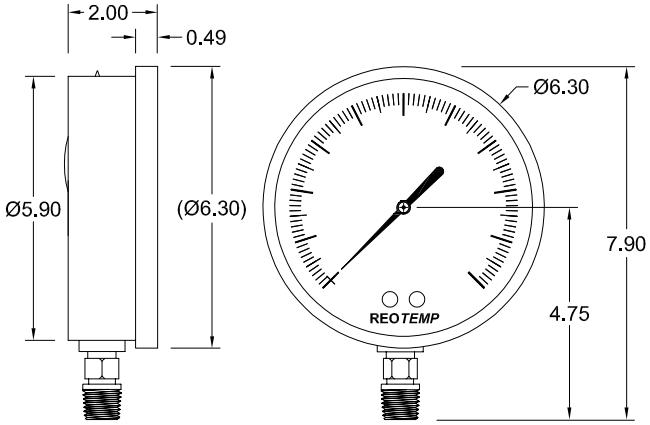

PC60S1

*dimensions in inches

SPECIFICATIONS

Accuracy	2 - 1.6 - 2%
Ambient Limits	-40°F/150°F
Process Limits	-40°F/200°F
Process Limits with Diaphragm Seal	-60°F/350°F (Direct Mount)* -110°F/750°F (Remote Mount or Cooling Tower)* *Exact limits depend on diaphragm seal and fill fluids.
Wetted Materials	Capsule: 316LSS Socket: 316SS
Lens	Tempered Safety Glass (Standard), Plastic or Laminated Safety Glass
Other Materials	Case: 304SS Ring: 304SS, Bayonet Twist-Off Dial: White Aluminum, Black Letters Case-to-Socket: Screw Connection, Vented Case
Fillable	No
Restrictor Screw	Yes
Maximum Working Pressure	Stable = 100% Momentary = 130% of scale
Weight	2.5" = 0.5 lbs 4" = 1.1 lbs 6" = 2.1 lbs

ALL STAINLESS STEEL LOW PRESSURE GAUGE

Visit reotemp.com

- ✓ Check Stock
- ✓ Configure Part #
- ✓ Get Price
- ✓ Download PDF Data Sheets

HOW TO ORDER: Choose options to build a part number. For example: PC40S1A2P52-D-T-HV

PC40	S	1	A	2	P52	-D	-T	-HV
DIAL SIZE	CASE TYPE	CAPSULE & SOCKET	MOUNT TYPE	CONNECTION	RANGE CODE	CASE FILL	LENS	OPTIONS

DIAL SIZE

PC25 = 2.5"

PC40 = 4"
PC60 = 6"

CASE TYPE

S = 304SS Case & Bezel w/ Removable Bayonet, Zero Correction on Dial

CAPSULE & SOCKET

1 = 316SS

MOUNT TYPE

A = Bottom
B = Bottom/Rear Flange
***C** = Center Back
***D** = Center Back "U" Clamp
***E** = Center Back/Front Flange

A = Bottom
B = Bottom/Rear Flange
***C** = Lower Back
***E** = Lower Back/Front Flange

CONNECTION

4 = 1/4" NPT

4 = 1/4" NPT
2 = 1/2" NPT

RANGE CODE

Common Ranges
P50 = 0-10 in H_2O
P51 = 0-15 in H_2O
P52 = 0-30 in H_2O
P53 = 0-60 in H_2O
P54 = 0-100 in H_2O
P55 = 0-160 in H_2O
P56 = 0-200 in H_2O

Available Ranges
- 10" to 300" Water Column
- Gauge Pressure, Vacuum, or Compound

Standard Units
- in H_2O

Available Units
- kPa
- mbar
- psi
- mmH_2O
- inHg
- mmHg
- oz/in^2
- & more

For Additional Range Codes See Page 46

CASE FILL

-D = Dry

Case is not fillable.

LENS

-T = Tempered Safety Glass (Standard)
-P = Plastic
-S = Laminated Safety Glass

OPTIONS

-HV = Hi-Vis™ Dial
-OX = Cleaned for O_2 Service
-C3 = 3 pt. Calibration Certificate
-TS = Stainless Steel Tag
-NC = NACE Compliance Certificate
-PM = Positive Material Identification Certification
-R5 = 1.5% Full Scale Accuracy (Not Available on Compound Ranges)

*Non-standard configuration

Diaphragm Seal Suitability Guide

Low pressure capsule gauges are very sensitive and require diaphragm seals with high sensitivity and high fluid displacement. If a diaphragm seal is required to isolate the process fluid from the pressure gauge, the following seal model types are available for the Series PC.

Diaphragm Seal Model

High Displacement

Total Gauge Span* (in H_2O)

	10"	15"	20"	30"	40"	60"	100"	160"	200"	300"
W6	X	X	X	X	X	X	S	S	T	T
W7	X	X	X	S	S	T	T	T		
V5	X	S	S	T	T	T	T	T		
T6	X	X	X	X	X	S	S	S	S	S

*Total gauge span is additive of negative and positive pressures.

Example: -15 - 0 - 30 psi = 45 psi span

- Assembly will function correctly with minimal accuracy degradation.
- T — Assembly will function correctly given stable temperature.
- S — Assembly is highly sensitive to orientation and temperature variance. REOTEMP cannot guarantee a stated accuracy.
- X — Assembly will not work. The diaphragm does not displace enough fill fluid to drive the pressure gauge.

4.5” LOW PRESSURE CAPSULE GAUGE

REOTEMP’s Series PC45 low pressure capsule gauges offer accurate and reliable measurements of gaseous media. Offered with stainless steel internals, they are designed to withstand corrosive media and ensure a long-lasting instrument.

PC45

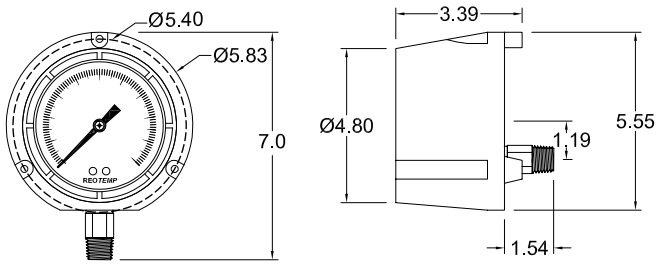

PC45

*dimensions in inches

Dials

Custom Logo

Diaphragm Seal Compatible

FEATURES / BENEFITS

- Sensitive Diaphragm/Capsule Mechanism
- Safety Blowout Back
- Easy-Access Zero Reset on Dial

ASME B40.100

NACE INTERNATIONAL THE CORROSION SOCIETY

SPECIFICATIONS

Accuracy	2 - 1.6 - 2% Full Scale
Ambient Limits	-40°F/150°F
Process Limits	-40°F/200°F
Process Limits with Diaphragm Seal	-60°F/350°F (Direct Mount)* -110°F/750°F (Remote Mount or Cooling Tower)* *Exact limits depend on diaphragm seal and fill fluids.
Wetted Materials	Capsule: 316LSS Socket: 316SS
Lens	Tempered Safety Glass(Standard), Plastic or Laminated Safety Glass
Other Materials	Case: Reinforced Thermoplastic, Phenolic Ring: Phenolic, Twist-Off Dial: Aluminum Case-to-Socket: O-ring, Vented Case
Fillable	No
Restrictor Screw	Yes
Maximum Working Pressure	Stable = 100% Momentary = 130% of scale
Environmental Protection	NEMA 4X/IP65
Weight	2.3 lbs

4.5” LOW PRESSURE CAPSULE GAUGE

Visit reotemp.com

- ✓ Check Stock
- ✓ Configure Part #
- ✓ Get Price
- ✓ Download PDF Data Sheets

HOW TO ORDER: Choose options to build a part number. For example: PC45P1A4P53-D-T-HV

PC45	P	1	A	4	P53	-D	-T	-HV
DIAL SIZE	**CASE TYPE**	**CAPSULE & SOCKET**	**MOUNT TYPE**	**CONNECTION**	**RANGE CODE**	**CASE FILL**	**LENS**	**OPTIONS**
PC45 = 4.5”	**P** = Fiberglass Reinforced Thermoplastic	**1** = 316SS	**A** = Bottom ***C** = Lower Back	**4** = 1/4” NPT **2** = 1/2” NPT	*Common Ranges* **P50** = 0-10 in H_2O **P51** = 0-15 in H_2O **P52** = 0-30 in H_2O **P53** = 0-60 in H_2O **P54** = 0-100 in H_2O **P55** = 0-160 in H_2O **P56** = 0-200 in H_2O *Available Ranges* ■ 10” to 300” Water Column ■ Gauge Pressure, Vacuum, or Compound *Standard Units* ■ in H_2O *Available Units* ■ kPa ■ inHg ■ mbar ■ mmHg ■ psi ■ oz/in^2 ■ mmH_2O ■ & more *For Additional Range Codes See Page 46*	**-D** = Dry *Case is not fillable.*	**-T** = Tempered Safety Glass (std) **-P** = Plastic **-S** = Laminated Safety Glass	**-HV** = Hi-Vis™ Dial **-C3** = 3pt. Calibration Certificate **-TS** =Stainless Steel Tag **-FM** =Flush Mount Ring for Panel Mounting **-NC** = NACE Compliance Certificate **-PM** = Positive Material Identification Certification **-R5** = 1.5% Full Scale Accuracy (Not Available on Compound Ranges)

*Non-standard configuration

Diaphragm Seal Suitability Guide

Low pressure capsule gauges are very sensitive and require diaphragm seals with high sensitivity and high fluid displacement. If a diaphragm seal is required to isolate the process fluid from the pressure gauge, the following seal model types are available for the Series PC.

Diaphragm Seal Model

High Displacement

Total Gauge Span* (in H_2O)

	10”	15”	20”	30”	40”	60”	100”	160”	200”	300”
W6	X	X	X	X	X	X	S	S	T	T
W7	X	X	X	S	S	T	T	T		
V5	X	S	S	T	T	T	T	T		
T6	X	X	X	X	X	S	S	S	S	S

*Total gauge span is additive of negative and positive pressures.

Example: -15 - 0 - 30 psi = 45 psi span

- (blank) Assembly will function correctly with minimal accuracy degradation.
- T Assembly will function correctly given stable temperature.
- S Assembly is highly sensitive to orientation and temperature variance. REOTEMP cannot guarantee a stated accuracy.
- X Assembly will not work. The diaphragm does not displace enough fill fluid to drive the pressure gauge.

2.5” GENERAL PURPOSE LOW PRESSURE GAUGE

REOTEMP’s Series PC25N2/S2 brass gauges are designed for use in low pressure applications with dry gasses that are compatible with copper alloy. Examples include: exhaust systems and blowers.

PC25N2

PC25S2

Custom Logo

FEATURES / BENEFITS

- Sensitive Diaphragm/Capsule Mechanism
- Black Steel or Stainless Steel Case
- Easy-Access Zero Reset on Dial
- Economical Design for Non-Severe Service

ASME B40.100

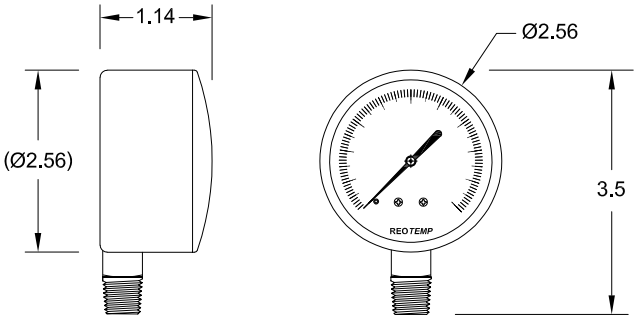

PC25N2

*dimensions in inches

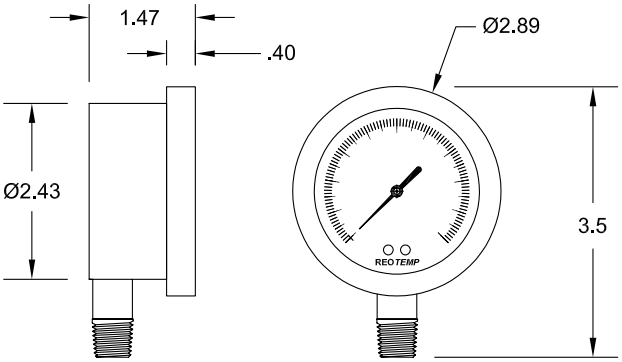

PC25S2

*dimensions in inches

SPECIFICATIONS

Accuracy	3 - 2 - 3%, ASME Grade B
Ambient Limits	-40°F/140°F
Process Limits	-40°F/140°F
Process Limits with Diaphragm Seal	Cannot be mounted to a diaphragm seal.
Wetted Materials	Capsule: Copper Alloy Socket: Copper Alloy
Lens	Plastic (Standard on “N” case, optional on “S” case) Glass (Standard on “S” case, not available on “N” case)
Other Materials	Case: Black Painted Steel or 304SS Ring: Snap-In Plastic or 304SS Dial: White Aluminum, Black Letters Case-to-Socket: Screw Connection
Fillable	No
Restrictor Screw	No
Maximum Working Pressure	Stable = 100% Momentary = 110% of scale
Weight	PC25N = .25 lbs, PC25S = .4 lbs

2.5” GENERAL PURPOSE LOW PRESSURE GAUGE

Visit reotemp.com

- ✓ Check Stock
- ✓ Get Price
- ✓ Configure Part #
- ✓ Download PDF Data Sheets

HOW TO ORDER: Choose options to build a part number. For example: PC25N2A4P53-D-P-TS

PC25	N	2	A	4	P53	-D	-P	-TS
DIAL SIZE	**CASE**	**CAPSULE & SOCKET**	**MOUNT TYPE**	**CONNECTION**	**RANGE CODE**	**CASE FILL**	**LENS**	**OPTIONS**
PC25 = 2.5”	**N** = Black Steel with Snap-In Plastic Window, Zero Correction **S** = 304 SS Case & Bezel with Removable Bayonet, Zero Correction on Dial	**2** = Copper Alloy	**A** = Bottom ***B** = Bottom/ Rear Flange **C** = Center Back ***D** = Center Back “U” Clamp ***E** = Center Back/ Front Flange	**4** = 1/4” NPT	*Common Ranges* **P51** = 0-15 in H_2O **P52** = 0-30 in H_2O **P53** = 0-60 in H_2O **P54** = 0-100 in H_2O **P55** = 0-160 in H_2O **P56** = 0-200 in H_2O **I55** = 0-5 psi *Available Ranges* ■ 15” to 300” Water Column ■ Gauge Pressure, Vacuum, or Compound *Standard Units* ■ in H_2O *Available Units* ■ kPa ■ inHg ■ mbar ■ mmHg ■ psi ■ oz/in^2 ■ mmH_2O ■ & more *For Additional Range Codes See Page 46*	**-D** = Dry *Case is not fillable.*	**-P** = Plastic[1] **-G** = Glass[2]	**-TS** = Stainless Steel Tag **-C3** = 3 pt. Calibration Certificate

*Non-standard configuration
[1]Standard on "N" Case
[2]Standard for “S” Case but Not Available on “N” Case

SANITARY PRESSURE GAUGE

REOTEMP SG sanitary gauges are specially designed to meet the demanding safety requirements of the food, dairy, beverage, pharmaceutical, and biotech applications. They come standard with 3-A certification.

SG

Certified Fillable Custom Logo Dials

FEATURES / BENEFITS

- Quick Connect Tri-Clamp® Design
- Fast Removal and Installation of Instruments, to Allow Flushing or Changing the Process Media
- Ideal for Clean-in-Place, or Equipment Washdown
- Designed to Meet 3-A Sanitary Standards
- Comes Standard with 3-A Certification
- All Welded 316SS Tube, Socket, Seal, and Diaphragm

ASME B40.100

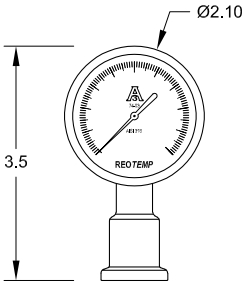

SG20ATC75
2” Gauge with 3/4” Tri-Clamp

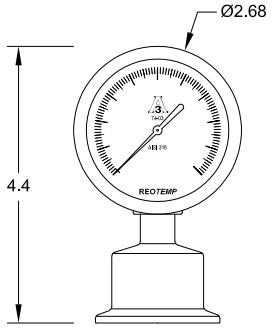

SG25ATC15
2.5” Gauge with 1.5” Tri-Clamp

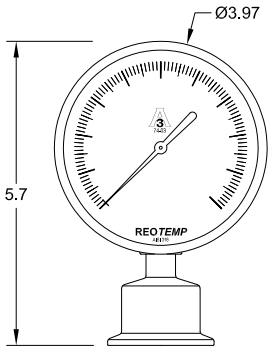

SG35ATC15
3.5” Gauge with 1.5” Tri-Clamp

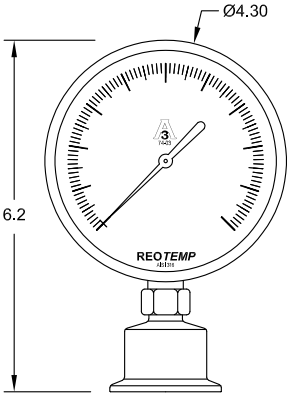

SG40ATC15
4” Gauge with 1.5” Tri-Clamp

For specific assembly drawings see online configurator.

SPECIFICATIONS

Accuracy (1.5" & Larger Tri-Clamp)	±1.5% for 100 psi and Above ±2% for Vacuum, Compound and <100 psi
Accuracy (3/4" Tri-Clamp)	±2.5% Upscale ±4% Downscale
Ambient Limits	-40°F/130°F
Process Limits	-40°F/200°F
Wetted Materials	Body: 316SS Internal Parts: 316SS Wetted Surface Finish: 18-24 Ra
Lens	Plastic (Standard), Laminated Safety Glass, Tempered Safety Glass or Polysulfone
Other Materials	Case: 304SS Dial: White Aluminum, Black Letters
Fillable	Yes, All Models Except SG20
Maximum Working Pressure	Stable = 100% Momentary = 130% of scale
Environmental Protection	NEMA 4X/IP65

SANITARY PRESSURE GAUGE

Visit reotemp.com

- ✓ Check Stock
- ✓ Configure Part #
- ✓ Get Price
- ✓ Download PDF Data Sheets

HOW TO ORDER: Choose options to build a part number. For example: SG25ATC20P18-D-P-AG-PP

SG25	A	TC	20	P18	-D	-P	-AG	-PP
MODEL	**CONNECTION LOCATION**	**CONNECTION TYPE**	**CLAMP SIZE**	**PRESSURE RANGE**	**CASE FILL**	**LENS**	**SEAL FILL FLUID**	**OPTIONS**
SG20 = 2" Dial Sanitary Gauge **SG25** = 2.5" Dial Sanitary Gauge **SG35** = 3" Dial Sanitary Gauge **SG40** = 4" Dial Sanitary Gauge	**A** = Bottom Connection **C** = Back Connection (Center Back Mount, Except 4" Dial is Lower Back Mount) **L** = Left Side Connection **R** = Right Side Connection **T** = Top Connection	**TC** = Tri-Clamp **CI** = I-Line	**75** = 3/4" **15** = 1.5" **20** = 2" **25** = 2.5" **30** = 3"	*Common Ranges* **P01** = -30inHg-0 psi **P03** = -30inHg-0-30 psi **P16** = 0-30 psi **P18** = 0-100 psi **P20** = 0-200 psi **P21** = 0-300 psi *Available Ranges* ■ Vac to 1,000 psi ■ Gauge Pressure, Vacuum, or Compound ■ Lowest Range = 15 psi *Available Units:* ■ psi (std) ■ bar ■ kPa ■ kg/cm² ■ ft H_2O ■ & more *For Additional Range Codes See Page 45*	**-D** = Dry **-G** = USP Glycerin **-W** = Glycerin/ Water (65/35) **-S** = Silicone *SG20 is not fillable.*	**-P** = Plastic **-S** = Laminated Safety Glass* **-T** = Tempered Safety Glass* **-F** = Polysulfone Lens with Weep Hole for Autoclaving, not Available with Case Fill* *Not Available on SG20	*See 58 for Complete Fill Guide* **-AG** = USP Glycerin **-BN** = Neobee M20 **-BS** = Food-grade Silicone	**-PP** = Pulse Plus™ (Pulsation Protection) **-EP** = Electropolish Diaphragm **-HC** = Hastelloy C-276 Wetted Parts **-TS** = SS Tag (1-10 Characters) **-HV** = Hi-Vis™ Dial **-MP** = Max Pointer (SG25 or SG40 Only) **-C3** = 3 Point Calibration Cert *See Pages 50 & 83 for Additional Options*

Diaphragm Seal Suitability Guide

For applications where a diaphragm seal is required, the following diaphragm seal model types are most commonly assembled and filled to Series PR25/35 pressure gauges. This matrix identifies which diaphragm seal is appropriate based on the specified pressure range. Please reference the diaphragm seal data sheet and seal fill fluid guide for additional application considerations including max pressure, temperature limits, and material compatibility.

Total Gauge Span* (in psi)

	Tri-Clamp	15	30	45	60	75	100	160	200 +
SG20	3/4"	X	S	S	T	T			
	1.5"	T							
	2"								
SG25	3/4"	X	S	S	T	T	T	T	
	1.5"	T	T						
	2"								
SG35	3/4"	X	S	S	T	T	T	T	
	1.5"	T	T						
	2"								
SG40	3/4"	X	X	X	X	X	X	X	X
	1.5"	X	X	X	T	T	T		
	2"	S	T	T					
	2.5"	T							

*Total gauge span is additive of negative and positive pressures.

Example: -15 - 0 - 30 psi = 45 psi span

- (green) Assembly will function correctly with minimal accuracy degradation.
- T — Assembly will function correctly given stable temperature.
- S — Assembly is highly sensitive to orientation and temperature variance. REOTEMP cannot guarantee a stated accuracy.
- X — Assembly will not work. The diaphragm does not displace enough fill fluid to drive the pressure gauge.

INDUSTRIAL STAINLESS STEEL GAUGE

REOTEMP's Series PM feature a stainless steel case, tube and socket, making the gauges resistant to corrosion from both environment and media. Liquid filling is recommended for severe service. The economical and attractive crimp ring design, along with a variety of convenient panel mounting adapters, make this popular gauge the right choice for many applications.

PM15C1A

PM15C1C

Fillable

FEATURES / BENEFITS

- Stainless Steel Case and Crimped Ring
- Stainless Steel Wetted Parts
- Glycerin Filled or Dry/Fillable
- Compact Design for Space-Limited Installation

ASME B40.100

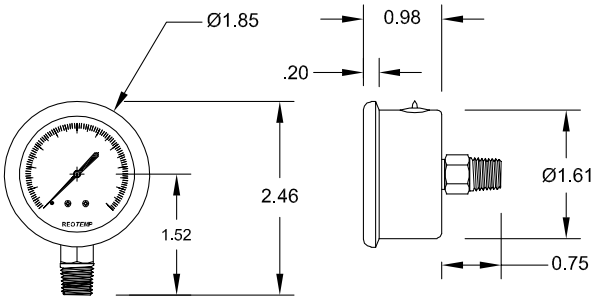

PM15 *dimensions in inches

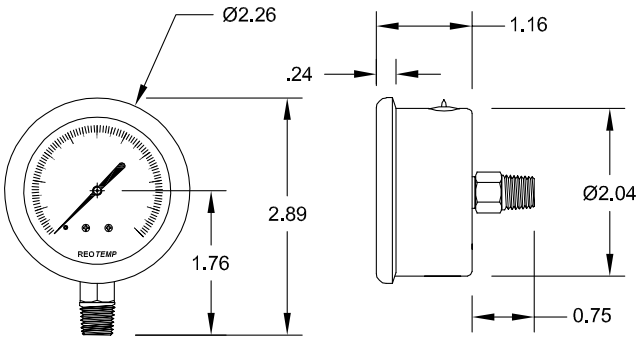

PM20 *dimensions in inches

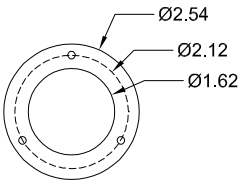

For PM20 mounting flange details, please contact REOTEMP customer service.

PM15 Mounting Flange

SPECIFICATIONS

Accuracy	3 - 2 - 3%, ASME Grade B
Ambient Limits	-40°F/140°F
Process Limits	-40°F/150°F
Process Limits with Diaphragm Seal	Cannot be mounted to a diaphragm seal.
Wetted Materials	Tube: 316SS Socket: 316SS
Lens	Plastic (Standard) or Glass
Other Materials	Case: 304SS Ring: 304SS Dial: White Aluminum, Black Letters Case-to-Socket: Screw Connection
Fillable	Yes
Restrictor Screw	Built-in, Non-Removable
Maximum Working Pressure	Stable = 100% Momentary = 110% of scale
Environmental Protection	NEMA 4X/IP65
Weight	1.5" = 0.15 lbs (0.25 lbs filled) 2" = 0.30 lbs (0.4 lbs filled)

INDUSTRIAL STAINLESS STEEL GAUGE

Visit reotemp.com

- ✓ Check Stock
- ✓ Configure Part #
- ✓ Get Price
- ✓ Download PDF Data Sheets

HOW TO ORDER: Choose options to build a part number. For example: PM15C1A8P16-G-P-TS

PM15	C	1	A	8	P16	-G	-P	-TS
DIAL SIZE	**CASE TYPE**	**TUBE & SOCKET**	**MOUNT TYPE**	**CONNECTION**	**RANGE CODE**	**CASE FILL**	**LENS**	**OPTIONS**
PM15 = 1.5” **PM20** = 2”	**C** = 304SS, Crimped Ring	**1** = 316SS	**A** = Bottom **C** = Center Back **D** = Center Back “U” Clamp **E** = Center Back/ Front Flange	**8** = 1/8” NPT **4** = 1/4” NPT	*Common Ranges* **P16** = 0-30 psi **P17** = 0-60 psi **P18** = 0-100 psi **P19** = 0-160 psi **P20** = 0-200 psi **P21** = 0-300 psi **P23** = 0-600 psi **P25** = 0-1,000 psi *Available Ranges* ■ Gauge Pressure, Vacuum, or Compound ■ Vac. to 6,000 PSI *For Additional Range Codes See Page 45*	**-D** = Dry **-G** = Glycerin **-W** = Glycerin/ Water (65/35)	**-P** = Plastic ***-G** = Glass	**-TS** = Stainless Steel Tag

*Non-standard configuration

INDUSTRIAL STAINLESS STEEL GAUGE

REOTEMP's Series PM feature a stainless steel case, tube and socket, making the gauges resistant to corrosion from both environment and media. Liquid filling is recommended for severe service. The economical and attractive crimp ring design, along with a variety of convenient panel mounting adapters, make this popular gauge the right choice for many applications.

PM25

PM40

Fillable Custom Logo

FEATURES / BENEFITS

- Economical Gauge with Stainless Steel Case and Internals
- Case is Easy to Fill in the Field
- Ideal for Both Indoor and Outdoor Applications

ASME B40.100

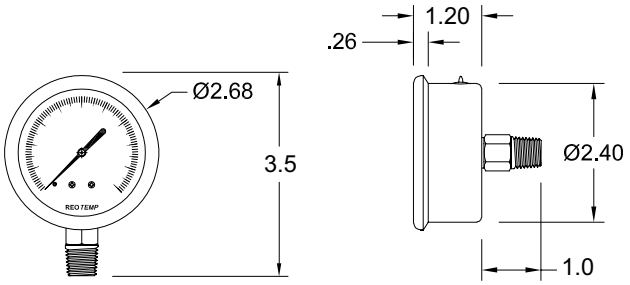

PM25 *dimensions in inches

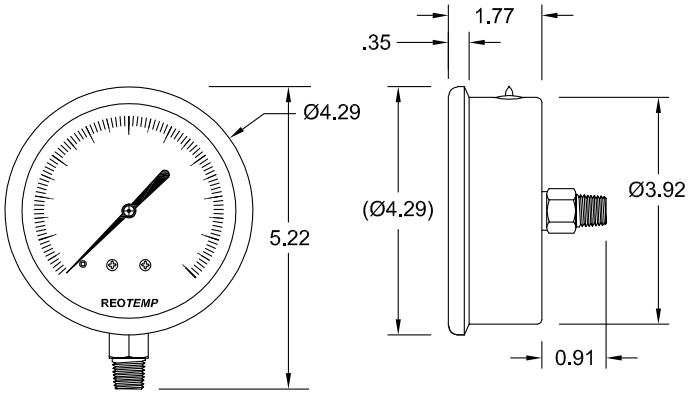

PM40 *dimensions in inches

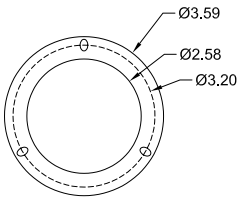

PM25 MOUNTING FLANGE

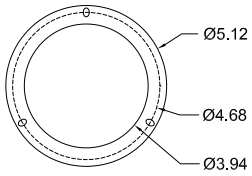

PM40 MOUNTING FLANGE

SPECIFICATIONS

Accuracy	2 - 1.6 - 2%, ASME Grade B+
Ambient Limits	-40°F/150°F
Process Limits	-40°F/150°F
Process Limits with Diaphragm Seal	Not recommended for diaphragm seal mounting, see PR model gauges for diaphragm seal mounting.
Wetted Materials	Tube: 316SS Socket: 316SS
Lens	Plastic (Standard) or Glass
Other Materials	Case: 304SS Ring: 304SS Dial: White Aluminum, Black Letters Case-to-Socket: Screw Connection
Fillable	Yes
Restrictor Screw	Built-in, Non-Removable
Maximum Working Pressure	Stable = 100% Momentary = 110% of scale
Environmental Protection	NEMA 4X/IP65
Weight	2.5" = 0.3 lbs (0.45 lbs filled) 4" = 0.8 lbs (1.4 lbs filled)

INDUSTRIAL STAINLESS STEEL GAUGE

Visit reotemp.com

- ✓ Check Stock
- ✓ Configure Part #
- ✓ Get Price
- ✓ Download PDF Data Sheets

HOW TO ORDER: Choose options to build a part number. For example: PM25C1A4P18-G-P-TS

PM25	C	1	A	4	P18	-G	-P	-TS
DIAL SIZE	**CASE TYPE**	**TUBE & SOCKET**	**MOUNT TYPE**	**CONNECTION**	**RANGE CODE**	**CASE FILL**	**LENS**	**OPTIONS**
PM25 = 2.5” **PM40** = 4”	**C** = 304SS Case w/ Crimped Ring	**1** = 316SS	**A** = Bottom **B** = Bottom/Rear Flange [1]**C** = Center Back [1]**D** = Center Back “U” Clamp [1]**E** = Center Back/Front Flange	**4** = 1/4” NPT **2** = 1/2” NPT (Not available on PM25)	*Common Ranges* **P16** = 0-30 psi **P17** = 0-60 psi **P18** = 0-100 psi **P19** = 0-160 psi **P20** = 0-200 psi **P21** = 0-300 psi **P23** = 0-600 psi **P25** = 0-1,000 psi *Available Ranges* ■ Gauge Pressure, Vacuum, or Compound ■ Vac to 10,000 psi *For Additional Range Codes See Page 45*	**-D** = Dry **-G** = Glycerin **-W** = Glycerin/ Water (65/35)	**-P** = Plastic ***-G** = Glass	**-TS** = Stainless Steel Tag

*Non-standard configuration
[1]Non-standard configuration for PM40

Series PG15/20C

INDUSTRIAL STAINLESS/BRASS GAUGE

REOTEMP's Series PG gauges are an economical choice where ambient corrosion and vibration are of concern. The stainless steel case and ring offer excellent corrosion resistance, and is fillable for vibration or pulsation applications. It is suitable for all fluids compatible with copper alloys.

PG15C2A

PG15C2C

Fillable Custom Logo

FEATURES / BENEFITS

- Stainless Steel Case
- Copper Alloy Wetted Parts
- Glycerin Filled or Dry/Fillable
- Convenient Panel Mounting Adapters

ASME B40.100

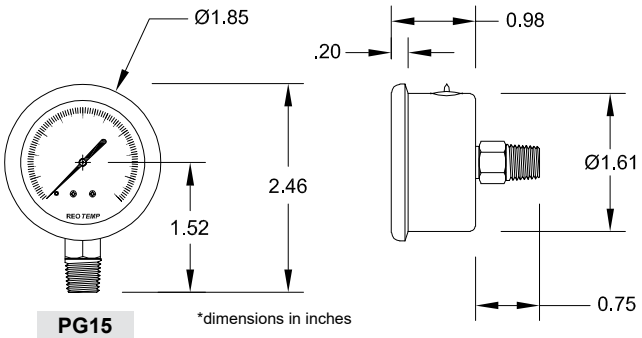

PG15

*dimensions in inches

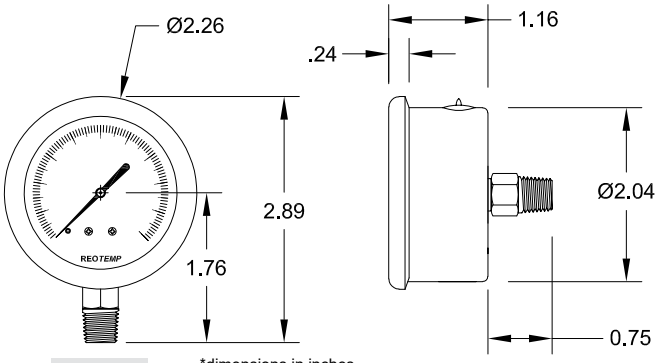

PG20

*dimensions in inches

PG15 Mounting Flange

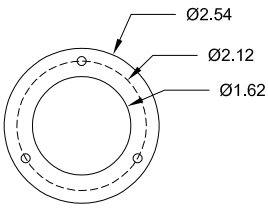

For PG20 mounting flange details, please contact REOTEMP customer service.

SPECIFICATIONS

Accuracy	3 - 2 - 3%, ASME Grade B
Ambient Limits	-40°F/140°F
Process Limits	-40°F/140°F
Process Limits with Diaphragm Seal	Cannot be mounted to a diaphragm seal.
Wetted Materials	Tube: Copper Alloy Socket: Copper Alloy
Lens	Plastic (Standard) or Glass
Other Materials	Case: 304SS Ring: 304SS Dial: White Aluminum, Black Letters Case-to-Socket: Screw Connection
Fillable	Yes
Restrictor Screw	Built-in, Non-Removable
Maximum Working Pressure	Stable = 100% Momentary = 110% of scale
Environmental Protection	NEMA 4X/IP65
Weight	1.5" = 0.15 lbs (0.25 lbs filled) 2" = 0.3 lbs (0.4 lbs filled)

INDUSTRIAL STAINLESS/BRASS GAUGE

Visit reotemp.com

- ✓ Check Stock
- ✓ Configure Part #
- ✓ Get Price
- ✓ Download PDF Data Sheets

HOW TO ORDER: Choose options to build a part number. For example: PG15C2A4P18-G-P-TS

PG15	C	2	A	4	P18	-G	-P	-TS
DIAL SIZE	**CASE TYPE**	**TUBE & SOCKET**	**MOUNT TYPE**	**CONNECTION**	**RANGE CODE**	**CASE FILL**	**LENS**	**OPTIONS**
PG15 = 1.5” **PG20** = 2”	**C** = 304SS Crimped Ring	**2** = Copper Alloy	**A** = Bottom **C** = Center Back **D** = Center Back “U” Clamp **E** = Center Back/ Front Flange	**8** = 1/8” NPT **4** = 1/4” NPT	*Common Ranges* **P16** = 0-30 psi **P17** = 0-60 psi **P18** = 0-100 psi **P19** = 0-160 psi **P20** = 0-200 psi **P21** = 0-300 psi **P23** = 0-600 psi **P25** = 0-1,000 psi *Available Ranges* ■ Gauge Pressure, Vacuum, or Compound ■ Vac to 6,000 psi *For Additional Range Codes See Page 45*	**-D** = Dry **-G** = Glycerin **-W** = Glycerin/ Water (65/35) *Note: This model cannot be filled with silicone.*	**-P** = Plastic ***-G** = Glass	**-TS** = Stainless Steel Tag

*Non-standard configuration

INDUSTRIAL STAINLESS/BRASS GAUGE

REOTEMP's Series PG gauges are an economical choice where ambient corrosion and vibration are of concern. The stainless steel case and ring offer excellent corrosion resistance, and is fillable for applications with vibration. It is suitable for all fluids compatible with copper alloys.

PG25C2

PG40C2

Fillable Custom Logo

FEATURES / BENEFITS

- Stainless Steel Case
- Copper Alloy Wetted Parts
- Field Fillable Case
- Convenient Panel Mounting Adapters

ASME B40.100

SPECIFICATIONS

Accuracy	2.5" = 3 - 2 - 3%, ASME Grade B 4" = 2 - 1 - 2%, ASME Grade A
Ambient Limits	-40°F/140°F
Process Limits	-40°F/140°F
Process Limits with Diaphragm Seal	Cannot be mounted to a diaphragm seal.
Wetted Materials	Tube: Copper Alloy Socket: Copper Alloy
Lens	Plastic (Standard) or Glass
Other Materials	Case: 304SS Ring: 304SS Dial: White Aluminum, Black Letters Case-to-Socket: Screw Connection
Fillable	Yes
Restrictor Screw	Built-in, Non-Removable
Maximum Working Pressure	Stable = 100% Momentary = 110% of scale
Environmental Protection	NEMA 4X/IP65
Weight	2.5" = 0.25 lbs (0.4 lbs filled) 4" = 0.6 lbs (1.2 lbs filled)

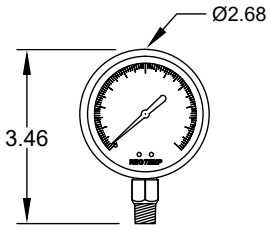

PG25C2

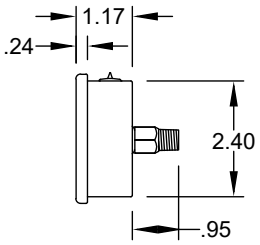

*dimensions in inches

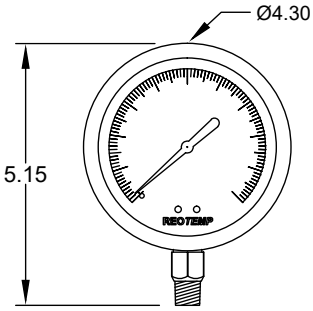

PG40C2

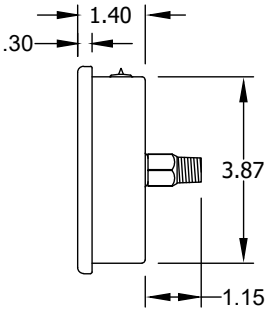

*dimensions in inches

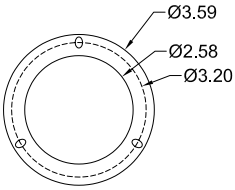

2.5" MOUNTING FLANGE

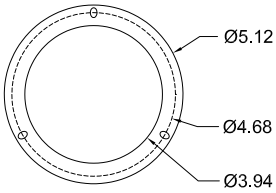

4" MOUNTING FLANGE

INDUSTRIAL STAINLESS/BRASS GAUGE

Visit reotemp.com

- ✓ Check Stock
- ✓ Configure Part #
- ✓ Get Price
- ✓ Download PDF Data Sheets

HOW TO ORDER: Choose options to build a part number. For example: PG25C2A4P18-D-P-TS

PG25	C	2	A	4	P18	-D	-P	-TS
DIAL SIZE	**CASE TYPE**	**TUBE & SOCKET**	**MOUNT TYPE**	**CONNECTION**	**RANGE CODE**	**CASE FILL**	**LENS**	**OPTIONS**
PG25 = 2.5” **PG40** = 4”	**C** = 304SS Crimped Ring	**2** = Copper Alloy	**A** = Bottom **B** = Bottom/Rear Flange **C** = Center Back **D** = Center Back “U” Clamp **E** = Center Back/Front Flange	**4** = 1/4” NPT ***2** = 1/2” NPT	*Common Ranges* **P16** = 0-30 psi **P17** = 0-60 psi **P18** = 0-100 psi **P19** = 0-160 psi **P20** = 0-200 psi **P21** = 0-300 psi **P23** = 0-600 psi **P25** = 0-1,000 psi *Available Ranges* ■ Gauge Pressure, Vacuum, or Compound ■ Vac to 6,000 psi *For Additional Range Codes See Page 45*	**-D** = Dry **-G** = Glycerin **-W** = Glycerin/ Water (65/35) *Note: This model cannot be filled with silicone.*	**-P** = Plastic ***-G** = Glass	**-TS** = Stainless Steel Tag

*Non-standard configuration

REPAIRABLE STAINLESS/BRASS GAUGE

REOTEMP's Series PG gauges are an economical choice where ambient corrosion and vibration are of concern. The stainless steel case and ring offer excellent corrosion resistance, and are fillable for applications with vibration. The PG25/40S is suitable for all fluids compatible with copper alloys.

PG25S PG40S

Fillable Dials Custom Logo Diaphragm Seal Compatible

FEATURES / BENEFITS

- Stainless Steel Case
- Copper Alloy Wetted Parts
- Glycerin Filled or Dry/Fillable
- Removable Bayonet, Adjustable Pointer

ASME B40.100

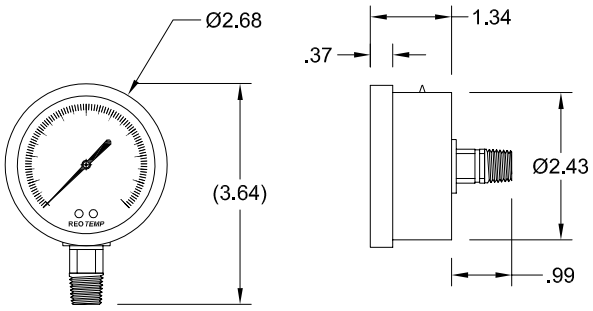

PG25S

*dimensions in inches

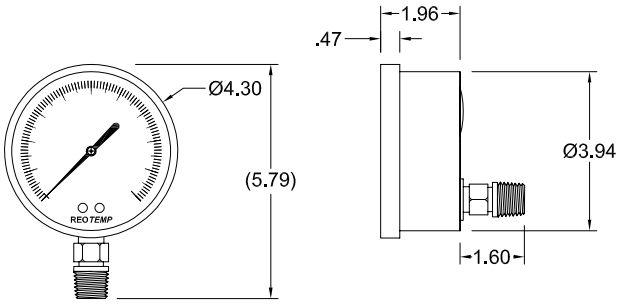

PG40S

*dimensions in inches

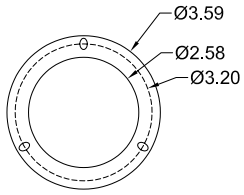

2.5" MOUNTING FLANGE

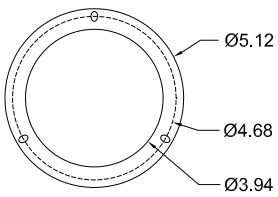

4" MOUNTING FLANGE

SPECIFICATIONS

Accuracy	2.5" = 2 - 1 - 2%, ASME Grade A 4" = 1%, ASME Grade 1A
Ambient Limits	-40°F/140°F
Process Limits	-40°F/150°F
Process Limits with Diaphragm Seal	Not recommended for diaphragm seal mounting, see PR model gauges for diaphragm seal mounting.
Wetted Materials	Tube: Copper Alloy Socket: Copper Alloy
Lens	Tempered Safety Glass (Standard), Plastic, or Laminated Safety Glass
Other Materials	Case: 304SS Ring: 304SS Dial: White Aluminum, Black Letters Case-to-Socket: Screw Connection
Fillable	Yes
Restrictor Screw	Yes, Removable
Maximum Working Pressure	Stable = 100% Momentary = 130% of scale
Environmental Protection	NEMA 4X/IP65
Weight	2.5" = 0.4 lbs (0.6 lbs filled) 4" = 1.3 lbs (2 lbs filled)

REPAIRABLE STAINLESS/BRASS GAUGE

Visit reotemp.com

- ✓ Check Stock
- ✓ Configure Part #
- ✓ Get Price
- ✓ Download PDF Data Sheets

HOW TO ORDER: Choose options to build a part number. For example: PG25S2A4P18-D-T-HV

PG25	S	2	A	4	P18	-D	-T	-HV
DIAL SIZE	**CASE TYPE**	**TUBE & SOCKET**	**MOUNT TYPE**	**CONNECTION**	**RANGE CODE**	**CASE FILL**	**LENS**	**OPTIONS**
PG25 = 2.5” **PG35**= 3.5” **PG40** = 4”	**S** = 304SS Case w/ Twist-Off Bayonet Ring	**2** = Copper Alloy	**A** = Bottom **B** = Bottom/Rear Flange **C** = Center Back **D** = Center Back “U” Clamp **E** = Center Back/ Front Flange	**4** = 1/4” NPT **2** = 1/2” NPT (Not available on PG25 or PG35)	*Common Ranges* **P03** = -30 in HG-0-30 psi **P16** = 0-30 psi **P17** = 0-60 psi **P18** = 0-100 psi **P20** = 0-200 psi **P21** = 0-300 psi **P23** = 0-600 psi *Available Ranges* ■ Vac to 6,000 psi ■ Gauge Pressure, Vacuum, or Compound *Standard Units* ■ psi ■ psi/bar *Available Units* ■ kPa ■ ft H_2O ■ bar ■ kg/cm^2 ■ psi ■ Dual Scales ■ & more *For Additional Range Codes See Page 45*	**-D** = Dry **-G** = Glycerin **-W** = Glycerin/ Water (65/35) *Note: This model cannot be filled with Silicone.*	**-T** = Tempered Safety Glass (Standard) **-P** = Plastic **-S** = Laminated Safety Glass	**-HV** = Hi-Vis™ Dial **-OX** = Cleaned for O_2 Service **-C3** = 3 pt. Calibration Certificate **-TS** = Stainless Steel Tag **-PM** = Positive Material Identification Certification

GENERAL PURPOSE GAUGE

REOTEMP's Series PD offers a wide variety of economical gauges for applications where ambient or process corrosion are not of concern. It is suitable for non-vibrating applications.

PD15 PD20 PD25

FEATURES / BENEFITS

- Standard Black Steel Case with Snap-In Lens
- Copper Alloy Wetted Parts
- Cost Effective Design

ASME B40.100

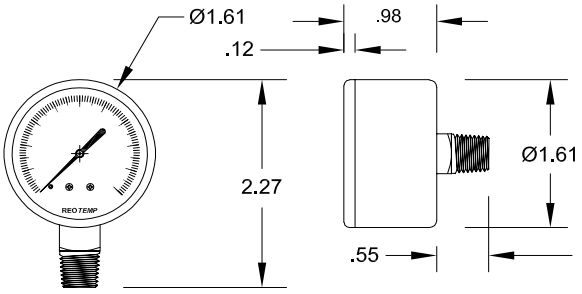

PD15 *dimensions in inches

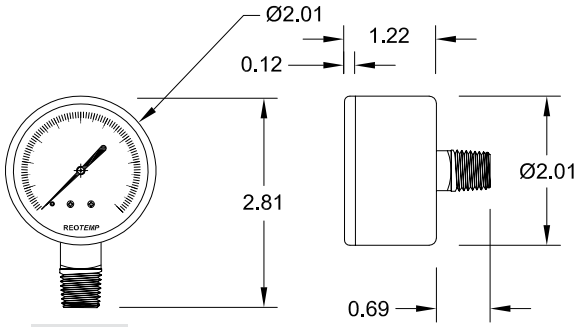

PD20 *dimensions in inches

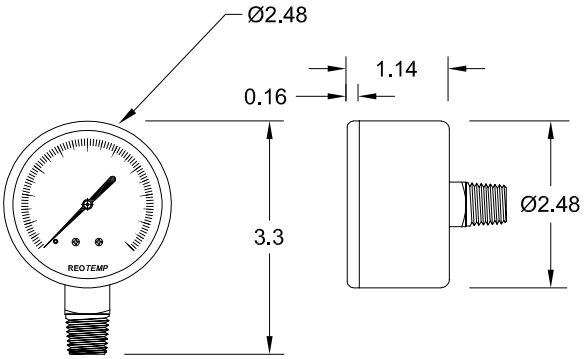

PD25 *dimensions in inches

SPECIFICATIONS

Accuracy	3 - 2 - 3%, ASME Grade B
Ambient Limits	-40°F/140°F
Process Limits	-40°F/140°F
Process Limits with Diaphragm Seal	Cannot Be Mounted to a Diaphragm Seal.
Wetted Materials	Tube: Copper Alloy Socket: Copper Alloy
Lens	Plastic Snap-In or Glass Push-On Bezel
Other Materials	Case: Black Painted Steel or Stainless Steel Ring: Snap-In Lens or Push-On Bezel Dial: White Aluminum, Black Letters Case-to-socket: Screw Connection
Fillable	No
Restrictor Screw	No
Maximum Working Pressure	Stable = 100% Momentary = 110% of scale
Weight	1.5" = 0.1 lbs 2" = 0.2 lbs 2.5" = 0.25 lbs

GENERAL PURPOSE GAUGE

Visit reotemp.com

- ✓ Check Stock
- ✓ Configure Part #
- ✓ Get Price
- ✓ Download PDF Data Sheets

HOW TO ORDER: Choose options to build a part number. For example: PD15N2A8P18-D-P-TP

PD15	N	2	A	8	P16	-D	-P	-TP
DIAL SIZE	**CASE TYPE**	**TUBE & SOCKET**	**MOUNT TYPE**	**CONNECTION**	**RANGE CODE**	**CASE FILL**	**LENS**	**OPTIONS**
PD15 = 1.5” **PD20** = 2” **PD25** = 2.5”	**N** = Black Steel Case, Snap-in Plastic Lens ***X** = SS Case, Snap-in Plastic Lens ***B** = Black Steel Case, Push-On Bezel with Glass Window ***Z** = SS Case, Push-On Bezel with Glass Window	**2** = Copper Alloy **1** = 316SS (Only available on 2” Dial w/ “Z” case)	**A** = Bottom ***B** = Bottom/Rear Flange **C** = Center Back ***D** = Center Back “U” Clamp ***E** = Center Back/Front Flange	**8** = 1/8” NPT **4** = 1/4” NPT[1]	*Common Ranges* **P16** = 0-30 psi **P17** = 0-60 psi **P18** = 0-100 psi **P19** = 0-160 psi *Available Ranges* ■ Vac to 5,000 psi ■ Gauge Pressure, Vacuum, or Compound *For Additional Range Codes See Page 45*	**-D** = Dry *Case is not fillable.*	**-P** = Plastic (N & X case) **-G** = Glass (B & Z case)	**-TP** = Paper Tag **-CS** = Calibration Sticker **-TS** = Stainless Steel Tag

*Non-standard configuration
[1]Non-standard on PD15

GENERAL PURPOSE GAUGE

REOTEMP's Series PD offers a wide variety of economical gauges for applications where ambient or process corrosion are not of concern. It is suitable for non-vibrating applications.

PD40

Custom Logo

FEATURES / BENEFITS

- Painted Black Steel Case
- Copper Alloy Wetted Parts
- Cost Effective Design

ASME B40.100

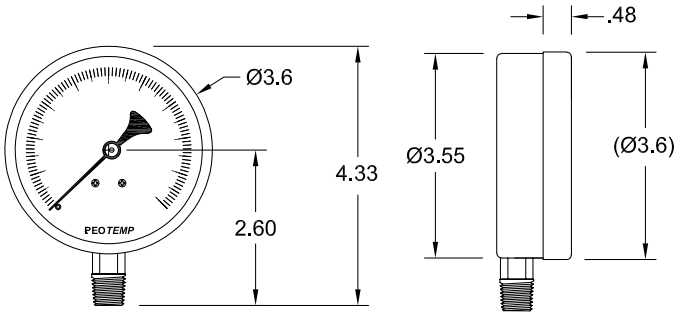

PD35

*dimensions in inches

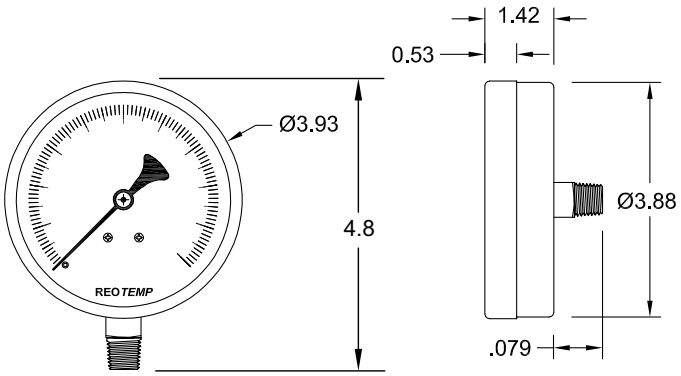

PD40

*dimensions in inches

SPECIFICATIONS

Accuracy	3 - 2 - 3%, ASME Grade B
Ambient Limits	-40°F/140°F
Process Limits	-40°F/140°F
Process Limits with Diaphragm Seal	Cannot Be Mounted to a Diaphragm Seal.
Wetted Materials	Tube: Copper Alloy Socket: Copper Alloy
Lens	Glass
Other Materials	Case: Black Painted Steel Ring: Black Painted Steel Dial: White Aluminum, Black Letters Case-to-Socket: Screw Connection
Fillable	No
Restrictor Screw	No
Maximum Working Pressure	Stable = 100% Momentary = 110% of scale
Weight	3.5" = 0.5 lbs 4" = 0.6 lbs

GENERAL PURPOSE GAUGE

Visit reotemp.com

- ✓ Check Stock
- ✓ Configure Part #
- ✓ Get Price
- ✓ Download PDF Data Sheets

HOW TO ORDER: Choose options to build a part number. For example: PD35B2A4P18-D-G-TP

PD35	B	2	A	4	P16	-D	-G	-TP
DIAL SIZE	**CASE TYPE**	**TUBE & SOCKET**	**MOUNT TYPE**	**CONNECTION**	**RANGE CODE**	**CASE FILL**	**LENS**	**OPTIONS**
PD35 = 3.5” **PD40** = 4”	**B** = Black Steel Case, Push-On Bezel w/ Glass Window	**2** = Copper Alloy	**A** = Bottom ***B** = Bottom/ Rear Flange **C** = Center Back ***E** = Center Back/ Front Flange	**4** = 1/4” NPT **2** = 1/2” NPT*	*Common Ranges* **P16** = 0-30 psi **P17** = 0-60 psi **P18** = 0-100 psi **P19** = 0-160 psi *Available Ranges* ■ Vac to 5,000 psi ■ Gauge Pressure, Vacuum, or Compound *For Additional Range Codes See Page 45*	**-D** = Dry *Case is not fillable.*	**-G** = Glass	**-TP** = Paper Tag **-CS** = Calibration Sticker **-TS** = Stainless Steel Tag

*Non-standard configuration

INDUSTRIAL TEST GAUGE

REOTEMP's Series PL test gauge is designed for use in laboratories, testing or calibration facilities, or wherever accuracy and repeatability are of prime importance. Rugged, all-welded stainless steel construction makes this gauge suitable for almost any test application. Reading error due to parallax is eliminated by use of a knife-edge pointer and mirror dial.

PL60

Accuracy

Custom Logo

FEATURES / BENEFITS

- Stainless Steel Case & Bayonet Ring
- Anti-Parallax, Mirror Dial
- 10 Point NIST Traceable Calibration Certificate Included

ASME B40.100

SPECIFICATIONS

Accuracy	0.25%, Grade 3A and 0.5% Grade 2A
Ambient Limits	-40°F/150°F
Process Limits	-40°F/150°F
Wetted Materials	Tube: 316SS Socket: 316SS
Lens	Tempered Safety Glass (Standard), Plastic, or Laminated Safety Glass
Other Materials	Case: 304SS Ring: 304SS, Twist-Off Bayonet Dial: Aluminum, Mirror Band Case-to-Socket: Screw Connection
Fillable	No
Restrictor Screw	Yes, Removable
Maximum Working Pressure	Stable = 100% Momentary = 110% of scale
Weight	2.2 lbs

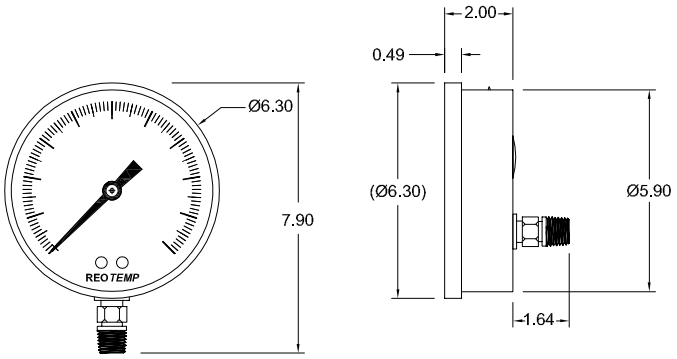

PL60

*dimensions in inches

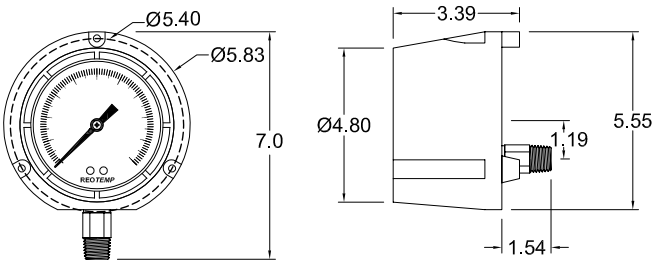

PL45

*dimensions in inches

INDUSTRIAL TEST GAUGE

HOW TO ORDER: Choose options to build a part number. For example: PL60M1A4P01-D-T-TS

PL60	M	1	A	4	P01	-D	-T	-TS
DIAL SIZE	**CASE TYPE**	**TUBE & SOCKET**	**MOUNT TYPE**	**CONNECTION**	**RANGE CODE**	**CASE FILL**	**LENS**	**OPTIONS**
PL60 = 6"	**M** = 304SS Bayonet, 0.25% Accuracy **R** = 0.5% Accuracy	**1** = 316SS	**A** = Bottom **B** = Bottom/Rear Flange **C** = Lower Back **D** = Lower Back "U" Clamp **E** = Lower Back/Front Flange **F** = Lower Back/Rear Flange	**4** = 1/4" NPT **2** = 1/2" NPT	*Common Ranges* **P01** = -30 inHg-0 psi **P03** = -30 inHg-0-30 psi **P16** = 0-30 psi **P18** = 0-100 psi **P20** = 0-200 psi **P21** = 0-300 psi **P25** = 0-1,000 psi **P34** = 0-5,000 psi *Available Ranges* ■ Vac to 6,000 psi ■ Gauge Pressure, Vacuum, or Compound *For Additional Range Codes See Page 45*	**-D** = Dry	**-T** = Tempered Safety Glass (std) **-P** = Plastic **-S** = Laminated Safety Glass	**-TS** = Stainless Steel Tag *NOTE: 10pt. NIST traceable calibration certificate comes standard.*
PL45 = 4.5"	**P** = Phenolic Case, 0.25% Accuracy		**A** = Bottom **C** = Lower Back		Available Ranges for 4.5": ■ Vacuum, Compound, and Pressure up to 1,000psi *For Additional Range Codes See Page 45*			

DIAPHRAGM TYPE DIFFERENTIAL GAUGE

REOTEMP Series D40/D42 differential pressure gauges are ideally suited for use on dissimilar fluids, wet gas or fluids with a high concentration of solids. Other applications include: use in Filter/Strainer Monitoring, Compressed Air, Hydraulic, Refrigerant, Pump Performance Testing, Heat Exchanger Pressure Drop Monitoring, Water Treatment Applications, Tank Level Monitoring Horizontal or Vertical, and Flow Monitoring & Balancing.

D40

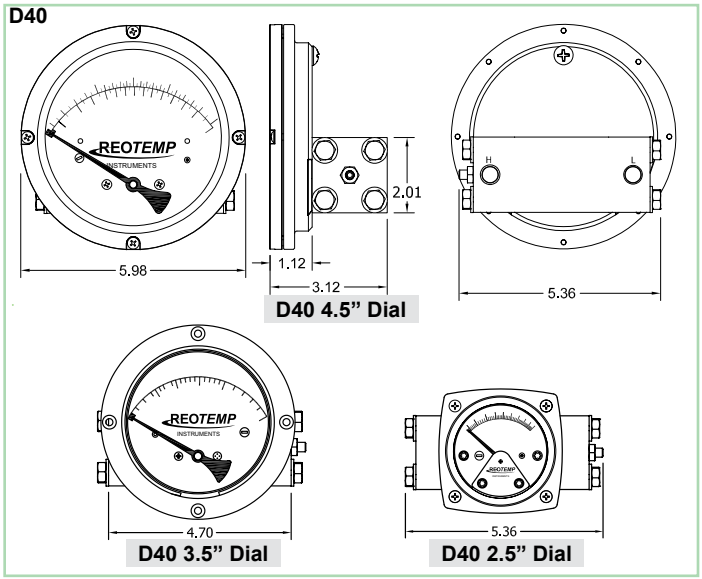

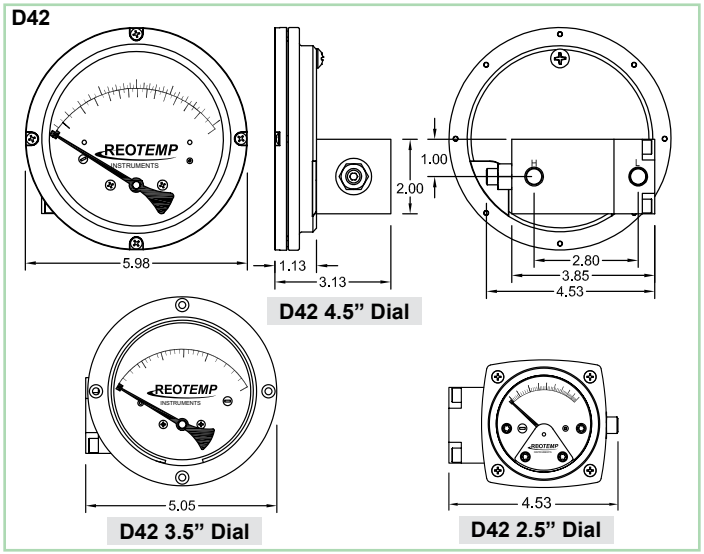

Fillable

Diaphragm Seal Compatible

FEATURES / BENEFITS

- Total Separation of High and Low by a Convoluted Elastomer Diaphragm
- Liquid Fillable Case Available
- For Use with Diaphragm Seals†
- Weatherproof Rated to NEMA 4X/IP65
- Working Pressure Up to 3,000 psi

SPECIFICATIONS

Accuracy	± 3 - 2 - 3%
Ambient Limits	-40°F/130°F
Process Limits	-40°F/200°F
Process Limits with Diaphragm Seal	-60°F/350°F (Direct Mount)* -110°F/750°F (Remote Mount or Cooling Tower)* *Exact limits depend on diaphragm seal and fill fluids.
Wetted Materials	Body: Aluminum, Brass, Monel, Aluminum-bronze, 316SS Internal Parts: 316SS, Monel Gaskets/Seals: Buna, Viton, Silicone, or Ethylene Propylene
Lens	Plastic (Standard) or Laminated Safety Glass
Other Materials	Case: Aluminum or Engineered Plastic, Dial: White Aluminum, Black Letters
Fillable	Yes, 4.5" Aluminum Case Only
Maximum Working Pressure	3,000 psi (6,000 proof) Aluminum or SS Body, 1,500 psi (3,000 proof) Brass Body
Environmental Protection	NEMA 4X/IP65

†Diaphragm seals protect the gauge against corrosion, heat, and clogging from certain process fluids. Diaphragm seals will reduce accuracy.

DIAPHRAGM TYPE DIFFERENTIAL GAUGE

Visit reotemp.com

- ✓ Configure Part #
- ✓ Get Price
- ✓ Generate a Custom Engineering Drawing
- ✓ Download PDF Data Sheets

HOW TO ORDER: Choose options to build a part number. For example: D402PAB-B4XXX-PD5-M1

D40	2P	A	B	-B4	XX	X
SERIES	**DIAL SIZE & CASE MATERIAL**	**BODY/ INTERNALS**	**DIAPHRAGM & GASKETS**	**PROCESS CONNECTION**	**SWITCH TYPE AND HOUSING**	**ELECTRICAL SPECIFICATION**
D40 = For DP Ranges of 30-100 psid **D42** = For DP Ranges of 20" inH_2Od thru 25 psid	**2P** = 2.5" Dial, Plastic Case **4P** = 4.5" Dial, Plastic Case **3A** = 3.5" Dial Aluminum Case **4A** = 4.5" Dial, Aluminum Case	**A** = Aluminum/316SS **S** = 316SS/316SS **B** = Brass/316SS **M** = Monel/316SS **N** = Aluminum-bronze/316SS Wetted	**B** = Buna-N **V** = Viton **S** = Silicone **E** = Ethylene Propylene Wetted	**-B4** = 1/4" NPTF back **-T4** = 1/4" NPTF top **-L4** = 1/4" NPTF bottom **-E4** = 1/4" NPTF end connection **-E2** = 1/2" NPTF end adapters	**XX** = None **A1** = Single reed switch, NEMA4X enclosure **A2** = Dual reed switch, NEMA4X enclosure **D1** = Single reed switch, explosion proof enclosure* **D2** = Dual reed switch, explosion proof enclosure* **E1** = Single reed switch, NEMA4X/ explosion proof enclosure** **E2** = Dual reed switch, NEMA4X/ explosion proof enclosure** **Transmitter Type and Housing:** **TA** = 4-20mA transmitter in NEMA4X enclosure **TX** = 4-20mA transmitter in explosion proof enclosure** *Complete Assembly Rated Class 1, Div. 1, Groups C&D; Class II, Div. 1, Groups E, F, G **Complete assembly rated class 1, Div. 2, groups A, B, C, D; Class II, Div. 2, Groups F&G	**X** = None **A** = SPDT, 3W, .25Amp **B** = SPST, 25W, .5Amp 230VAC/Vdc **T** = 4-20mA output 8-28Vdc loop power

-PD5	-M1
PRESSURE RANGE	**OPTIONS**
-PD5 = 0-5 psid **-PD10** = 0-10 psid **-PD20** = 0-20 psid **-PD100** = 0-100 psid **-ID25** = 0-25 inH_2Od **-ID100** = 0-100 inH_2Od *For Additional Range Codes See Page 46*	**-M1** = 2" Pipe Mounting Kit with Carbon Steel Bracket **-M2** = 2" Pipe Mounting Kit with Stainless Steel Bracket **-M3** = Wall Mounting Kit **-SG** = Laminated Safety Glass (4A Dial ONLY) **-MP** = Max Pointer (Not Available with SG or LF) **-LF** = Liquid fill (only with 4A dial, std. lens) **-TS** = SS tag **-OX** = Cleaned for oxygen service **-C3** = 3pt. Calibration Cert.

Diaphragm Seal Suitability Guide

Differential Pressure Gauges are very sensitive and require diaphragm seals with high fluid displacement. If a diaphragm seal is required to isolate the process fluid from the pressure gauge, the following seal model types are available for the Series D40/42.

Diaphragm Seal Model — **Total Gauge Span**

High Displacement

	<99"H_2O	100"H_2O	150"H_2O	10psi	15psi	20psi+
W7	X	S	S	T		
T6	X	X	X	T		
V5	X	S	T			

	Assembly will function correctly with minimal accuracy degradation.
T	Assembly will function correctly given stable temperature.
S	Assembly is highly sensitive to orientation and temperature variance. REOTEMP cannot guarantee a stated accuracy.
X	Assembly will not work. The diaphragm does not displace enough fill fluid to drive the pressure gauge.

*Visit **reotemp.com/configurators** for easy seal configuration.*

PISTON TYPE MECHANICAL DIFFERENTIAL PRESSURE GAUGE

REOTEMP Series D20 Piston Type Mechanical Differential Pressure Gauges are primarily designed for liquid applications. Differential pressure is sensed by the movement of a precisely ground floating piston/magnet in a precision bore against a calibrated spring. A rotary pointer magnet located close to the internal magnet follows the movement of the piston magnet and indicates differential pressure on the dial. Piston type differential pressure gauges exhibit a slight amount of bypass as the fluid crosses from the high to the low pressure port.

D20

Fillable

FEATURES / BENEFITS

- Rugged, Compact, Cost Effective Design
- Weatherproof Rated to NEMA 4X/IP65
- Working Pressure Up to 6,000 psi
- Over-range Protection to Max Working Pressure
- Popular for Filters and Strainers
- ± 2% Full Scale Accuracy

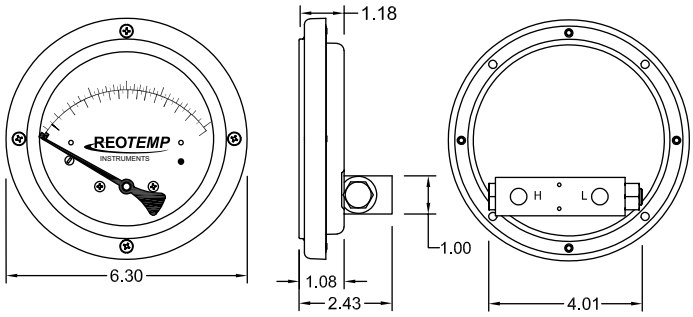

D20 4.5" Dial

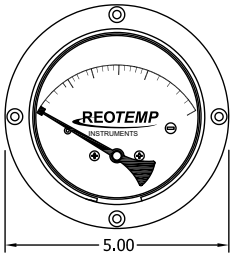

D20 3.5" Dial

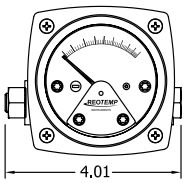

D20 2.5" Dial

SPECIFICATIONS

Accuracy	± 2% Full Scale
Ambient Limits	-40°F/130°F
Process Limits	-40°F/200°F
Process Limits with Diaphragm Seal	Series D20 cannot be mounted to a diaphragm seal. See series D40/42 for gauges mountable to a diaphragm seal.
Wetted Materials	Body: Aluminum, 316SS Internal Parts: 316SS Gasket/Seals: Buna, Viton, Teflon, Ethylene Propylene, or Perfluoroelastomer
Lens	Plastic (Standard) or Laminated Safety Glass
Other Materials	Case: Aluminum or Engineered Plastic Dial: White Aluminum, Black Letters
Fillable	Yes, Except for 3.5" Dial
Maximum Working Pressure	3,000 psi - Aluminum Body 6,000 psi - 316SS Body
Environmental Protection	NEMA 4X/IP65

PISTON TYPE MECHANICAL DIFFERENTIAL PRESSURE GAUGE

Visit reotemp.com

- ✓ Configure Part #
- ✓ Get Price
- ✓ Generate a Custom Engineering Drawing
- ✓ Download PDF Data Sheets

HOW TO ORDER: Choose options to build a part number. For example: D202PAB-B4XXA-PD5-M1

D20	2P	A	B	-B4	XX	A
SERIES	**DIAL SIZE/ CASE MATERIAL**	**BODY/ INTERNALS**	**DIAPHRAGM & GASKETS**	**PROCESS CONNECTION**	**SWITCH OR TRANSMITTER TYPE & HOUSING**	**ELECTRICAL SPECIFICATION**
D20 = Mechanical DP Gauage Piston Style (5-110 psid)	**2P** = 2.5" Dial, Plastic Case **4P** = 4.5" Dial, Plastic Case **3A** = 3.5" Dial Aluminum Case **4A** = 4.5" Dial, Aluminum Case	**A** = Aluminum/ 316SS **S** = 316SS/ 316SS Wetted	**B** = Buna-N **V** = Viton **E** = Ethylene Propylene **P** = Perfluoro-elastomer Wetted	**-B4** = 1/4" NPTF back **-E4** = 1/4" NPTF end connection **-L4** = 1/4" NPTF bottom **-E2** = 1/2" NPTF end adapters	**XX** = None **A3** = Single Reed Switch, Flying Leads with Grommet Wire Seal **A4** = Dual Reed Switch, Flying Leads with Grommet Wire Seal **A5** = Single Reed Switch, Flying Leads with 1/4" FNPT NEMA4X **A6** = Dual Reed Switch, Flying Leads with 1/4" FNPT NEMA4X **D3**= Single Reed Switch, Explo-sion Proof Enclosure* **D4** = Dual Reed Switch, Explo-sion Proof Enclosure* *Complete assembly rated class 1, Div. 2, groups A, B, C, D; Class II, Div. 2, Groups F&G	**X** = None **A** = SPDT, 3W, .25Amp 125VAC/Vdc **B** = SPST, 60W, 1.0Amp 240VAC/Vdc

-PD5	-M1
PRESSURE RANGE	**OPTIONS**
-PD5 = 0-5 psid **-PD10** = 0-10 psid **-PD20** = 0-20 psid **-PD50** = 0-50 psid **-PD100** = 0-100 psid *For Additional Range Codes See Page 46*	**-M1** = 2" Pipe Mounting Kit with Carbon Steel Bracket **-M2** = 2" Pipe Mounting Kit with Stainless Steel Bracket **-M3** = Wall Mounting Kit **-SG** = Laminated Safety Glass (ONLY with 4A Dial) **-MP** = Max Pointer (Not Available with SG or LF) **-LF** = Liquid fill (Not Available with 3A Dial) **-TS** = SS Tag **-OX** = Cleaned for oxygen service

HIGH-ACCURACY INDUSTRIAL DIFFERENTIAL PRESSURE GAUGE

The REOTEMP Series D05/06 High Accuracy Bellows DP Gauge is a precise, easy-to-read, and rugged instrument built for the industrial markets. Available in a variety of wetted materials, this gauge is ideally suited for a variety of applications involving the differential pressure measurement of many process fluids.

D06

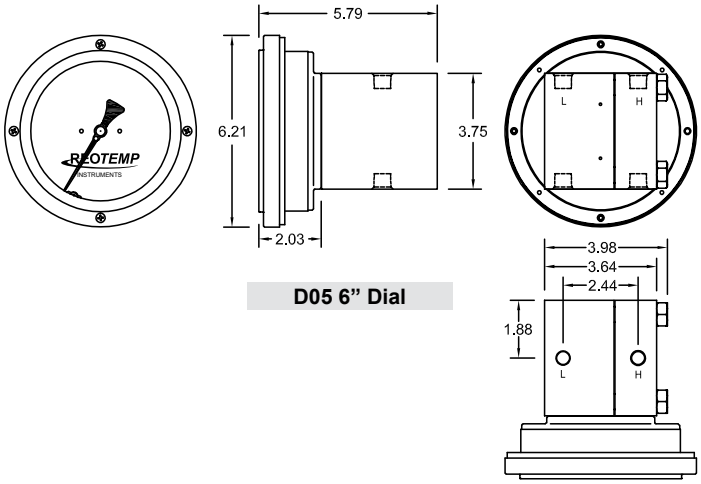

D05 6” Dial

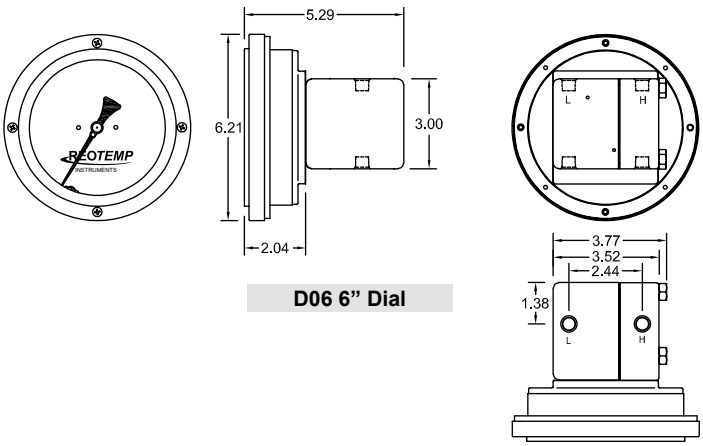

D06 6” Dial

FEATURES / BENEFITS

- High Accuracy ± 1% or .5% Full Scale
- Sensitive Bellows Measuring Element
- 270 Degree Dial Arc
- Differential Spans from 10” inH_2Od through 30 psid

SPECIFICATIONS

Accuracy	± 1% or .5% full scale
Ambient Limits	-40°F/130°F
Process Limits	-40°F/200°F
Process Limits with Diaphragm Seal	Series D05/06 cannot be mounted to a diaphragm seal. See series D40/42 for gauges mountable to a diaphragm seal.
Wetted Materials	Body: Aluminum, 316SS Internal Parts: 316SS Gasket/Seals: Buna, Viton, Teflon, Ethylene Propylene, or Silicone
Lens	Plastic (Standard) or Laminated Safety Glass
Other Materials	Dial Case: Engineered Plastic Dial: White Aluminum, Black Letters
Fillable	Yes
Maximum Working Pressure	3,000 psi - Aluminum Body 6,000 psi - 316SS Body
Environmental Protection	NEMA 4X/IP65

HIGH-ACCURACY INDUSTRIAL DIFFERENTIAL PRESSURE GAUGE

Visit reotemp.com

- ✓ Configure Part #
- ✓ Get Price
- ✓ Generate a Custom Engineering Drawing
- ✓ Download PDF Data Sheets

HOW TO ORDER: Choose options to build a part number. For example: D066PFB-D4W1M-PD5-M1

D06 | 6P | F | B | -D4

SERIES

D05 = For DP Ranges: 10-79 inH_2Od (.4-3 psi)

D06 = For DP Ranges: 80-800 inH_2Od (3-30 psi)

DIAL SIZE

4S = 4.5" Dial, Plastic Housing, 1% Full Scale
6P = 6" Dial, Plastic Housing, 1% Full Scale
6H = 6" Dial, Plastic Housing, 1/2% Full Scale*
4H = 4" Dial, Plastic Housing, 1/2% Full Scale*

*30" WC and Above

MATERIAL/ MAX WORKING PRESSURE

Code	Body	Internals	MWP
F	Aluminum	SS	1,500 psi
G	Aluminum	SS	3,000 psi
M	Mild Carbon Steel	SS	1,500 psi
N	Mild Carbon Steel	SS	3,000 psi
Q	316SS	SS	1,500 psi
R	316SS	SS	3,000 psi
T	316SS	SS	6,000 psi
X	Brass	SS	1,500 psi
Y	Brass	SS	500 psi

Wetted

GASKETS & SEALS

B = Buna
V = Viton
S = Silicone
E = Ethylene/ Propylene

Wetted

PROCESS CONNECTION

-D4 = 1/4" FNPT Top and Bottom

W1 | M | -PD5 | -M1

SWITCH TYPE AND HOUSING

XX = None
W1 = One Micro Switch in Weatherproof Enclosure ±2%
W2 = Two Micro Switch in Weatherproof Enclosure ±2%

ELECTRICAL CONNECTION

X = None
M = SPDT 4A, 30VDC; 3A, 240 VAC; 5A, 120VAC

PRESSURE RANGE

-PD1 = 0-1 psid
-PD5 = 0-5 psid
-PD10 = 0-10 psid
-PD20 = 0-20 psid
-ID25 = 0-25 inH_2Od
-ID100 = 0-100 inH_2Od
-ID300 = 0-300 inH_2Od

For Additional Range Codes See Page 46

OPTIONS

-M1 = 2" Pipe Mounting Kit with Carbon Steel Bracket
-M2 = 2" Pipe Mounting Kit with Stainless Steel Bracket
-M3 = Wall Mounting Kit
-SG = Laminated Safety Glass
-TS = SS tag
-OX = Cleaned for oxygen service

HIGH-ACCURACY INDUSTRIAL DIFFERENTIAL PRESSURE GAUGE

The REOTEMP Series D09, Bourdon Tube Style Differential Pressure Gauge is ideally suited for a broad range of applications requiring high accuracy and/or high differential pressure range. The large 6” dial with complete 270 degree dial arc makes the D09 the easiest to read differential pressure gauge.

D09

Fillable

Accuracy

FEATURES / BENEFITS

- High Accuracy ±1% or .5% Full Scale
- Sensitive Bourdon Tube Construction
- 270 Degree Dial Arc
- Differential Span Up to 6,000 psid

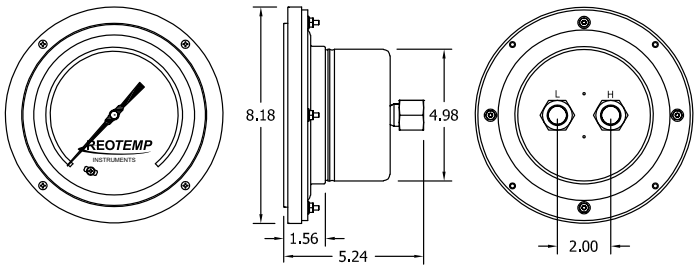

D09 6” Dial, Back Connected

SPECIFICATIONS

Accuracy	± 1% or .5% full scale
Ambient Limits	-40°F/130°F
Process Limits	-40°F/200°F
Process Limits with Diaphragm Seal	Series D09 cannot be mounted to a diaphragm seal. See series D40/42 for gauges mountable to a diaphragm seal.
Wetted Materials	Body: Aluminum, 316SS, Brass, Carbon Steel Internal Parts: 316SS, Copper Alloy Gasket/Seals: Buna, Viton, Teflon, Ethylene Propylene, or Silicone
Lens	Plastic (Standard) or Laminated Safety Glass
Other Materials	Dial Case: Engineered Plastic Dial: White Aluminum, Black Letters
Fillable	Yes
Maximum Working Pressure	3,000 psi - Aluminum Body 6,000 psi - 316SS Body
Environmental Protection	NEMA 4X/IP65

HIGH-ACCURACY INDUSTRIAL DIFFERENTIAL PRESSURE GAUGE

Visit reotemp.com

✓ Configure Part #
✓ Get Price
✓ Generate a Custom Engineering Drawing ✓
Download PDF Data Sheets

HOW TO ORDER: Choose options to build a part number. For example: D094PFB-B4XXX-PD20-M1

D09 | 4S | F | B | -B4

SERIES

D09 = For DP Ranges: 15-6,000 psid

DIAL SIZE

4S = 4.5" Dial, Plastic Housing
6P = 6" Dial, Plastic Housing, 1% Full Scale
6H = 6" Dial, Plastic Housing, 1/2% Full Scale

MATERIAL/ MAX WORKING PRESSURE

Code	Body	Internals	MWP
F	Aluminum	SS	1,500 psi
G	Aluminum	SS	3,000 psi
M	Mild Carbon Steel	SS	1,500 psi
N	Mild Carbon Steel	SS	3,000 psi
Q	316SS	SS	1,500 psi
R	316SS	SS	3,000 psi
T	316SS	SS	6,000 psi
X	Brass	SS	1,500 psi
Y	Brass	SS	500 psi

Wetted

GASKETS & SEALS

B = Buna
V = Viton
S = Silicone
E = Ethylene/ Propylene

Wetted

PROCESS CONNECTION

-B4 = 1/4" FNPT-Back
-B2 = 1/2" FNPT-Back (SS Adapters)

XX | X | -PD20 | -M1

SWITCH TYPE AND HOUSING

XX = None

ELECTRICAL CONNECTION

X = None

PRESSURE RANGE

-PD20 = 0-20 psid
-PD100 = 0-100 psid
-PD1000 = 0-1000 psid
-BD7 = 0-7 bard
-BD140 = 0-140 bard

For Additional Range Codes See Page 46

OPTIONS

-M1 = 2" Pipe Mounting Kit with Carbon Steel Bracket
-M2 = 2" Pipe Mounting Kit with Stainless Steel Bracket
-M3 = Wall Mounting Kit
-SG = Laminated Safety Glass
-MP = Max Pointer (Not Available with LF)
-LF = Liquid Fill
-TS = SS Tag
-OX = Cleaned for Oxygen Service

Master Range Code Sheet

PRESSURE GAUGE RANGES AND CODES

VACUUM/COMPOUND RANGES

psi		Dual Scale & psi & Metric						Single Scale-Metric					
"Hg/0/psi		psi & bar		psi & kg/cm²		psi & kPa		bar		kg/cm²		kPa	
Code	Range	Code	Range	Code	Range	Code	Range	Code	Range	Code	Range	Code	Range
P01	-30"Hg/0	D01	"Hg & -1/0 bar	G01	"Hg & -1/0 kg/cm²	L01	"Hg & -100/0 kPa	B00	-1/0 bar	K00	-1/0 kg/cm²	A00	-100/0 kPa
P02	-30/0/15	D02	psi & -1/0/1	G02	psi & -1/0/1	L02	psi & -100/0/100	B01	-1/0/1	K01	-1/0/1	A01	-100/0/100
P03	-30/0/30	D03	psi & -1/0/2	G03	psi & -1/0/2	L03	psi & -100/0/200	B02	-1/0/2	K02	-1/0/2	A02	-100/0/200
P04	-30/0/60	D04	psi & -1/0/4	G04	psi & -1/0/4	L04	psi & -100/0/400	B04	-1/0/4	K04	-1/0/4	A04	-100/0/400
P05	-30/0/100	D05	psi & -1/0/7	G05	psi & -1/0/7	L05	psi & -100/0/700	B07	-1/0/7	K07	-1/0/7	A07	-100/0/700
P06	-30/0/160	D06	psi & -1/0/11	G06	psi & -1/0/11	L06	psi & -100/0/1,100	B011	-1/0/11	K011	-1/0/11	A011	-100/0/1,100
P07	-30/0/200	D07	psi & -1/0/14	G07	psi & -1/0/14	L07	psi & -100/0/1,400	B014	-1/0/14	K014	-1/0/14	A014	-100/0/1,400
P08	-30/0/300	D08	psi & -1/0/20	G08	psi & -1/0/20	L08	psi & -100/0/2,000	B020	-1/0/20	K020	-1/0/20	A020	-100/0/2,000

PRESSURE RANGES

psi		Dual Scale & psi & Metric						Single Scale-Metric					
psi		psi & bar		psi & kg/cm²		psi & kPa		bar		kg/cm²		kPa	
Code	Range	Code	Range	Code	Range	Code	Range	Code	Range	Code	Range	Code	Range
P14	0-10 psi	D14	psi & .7 bar	G14	psi & .7 kg/cm²	L14	psi & 70 kPa						
P15	0-15	D15	psi & 0-1	G15	psi & 0-1	L15	psi & 0-100	B1	0-1 bar	K1	0-1 kg/cm²	A1	0-100 kPa
P16	0-30	D16	psi & 0-2	G16	psi & 0-2	L16	psi & 0-200	B2	0-2	K2	0-2	A2	0-200
P17	0-60	D17	psi & 0-4	G17	psi & 0-4	L17	psi & 0-400	B4	0-4	K4	0-4	A4	0-400
P18	0-100	D18	psi & 0-7	G18	psi & 0-7	L18	psi & 0-700	B7	0-7	K7	0-7	A7	0-700
P19	0-160	D19	psi & 0-11	G19	psi & 0-11	L19	psi & 0-1,100	B11	0-11	K11	0-11	A11	0-1,100
P20	0-200	D20	psi & 0-14	G20	psi & 0-14	L20	psi & 0-1,400	B14	0-14	K14	0-14	A14	0-1,400
P21	0-300	D21	psi & 0-20	G21	psi & 0-20	L21	psi & 0-2,000	B20	0-20	K20	0-20	A20	0-2,000
P22	0-400	D22	psi & 0-28	G22	psi & 0-28	L22	psi & 0-2,800	B28	0-28	K28	0-28	A28	0-2,800
P23	0-600	D23	psi & 0-40	G23	psi & 0-40	L23	psi & 0-4,000	B40	0-40	K40	0-40	A40	0-4,000
P24	0-800	D24	psi & 0-55	G24	psi & 0-55	L24	psi & 0-5,500	B55	0-55	K55	0-55	A55	0-5,500
P25	0-1,000	D25	psi & 0-70	G25	psi & 0-70	L25	psi & 0-7,000	B70	0-70	K70	0-70	A70	0-7,000
P30	0-1,500	D30	psi & 0-100	G30	psi & 0-100	L30	psi & 0-10,000	B100	0-100	K100	0-100	A100	0-10,000
P31	0-2,000	D31	psi & 0-140	G31	psi & 0-140	L31	psi & 0-14,000	B140	0-140	K140	0-140	A140	0-14,000
P32	0-3,000	D32	psi & 0-200	G32	psi & 0-200	L32	psi & 0-20,000	B200	0-200	K200	0-200	A200	0-20,000
P33	0-4,000	D33	psi & 0-280	G33	psi & 0-280	L33	psi & 0-28,000	B280	0-280	K280	0-280	A280	0-28,000
P34	0-5,000	D34	psi & 0-350	G34	psi & 0-350	L34	psi & 0-35,000	B350	0-350	K350	0-350	A350	0-35,000
P35	0-6,000	D35	psi & 0-400	G35	psi & 0-400	L35	psi & 0-40,000	B400	0-400	K400	0-400	A400	0-40,000
P36	0-8,000	D36	psi & 0-550	G36	psi & 0-550	L36	psi & 0-55,000	B550	0-550	K550	0-550	A550	0-55,000
P37	0-10,000	D37	psi & 0-700	G37	psi & 0-700	L37	psi & 0-70,000	B700	0-700	K700	0-700	A700	0-70,000
P38	0-15,000	D38	psi & 0-1,000	G38	psi & 0-1,000	L38	psi & 0-100,000	B1K	0-1,000	K1K	0-1,000	A1K	0-100,000
P39	0-20,000	D39	psi & 0-1,400	G39	psi & 0-1,400	L39	psi & 0-140,000						
P40	0-30,000	D40	psi & 0-2,000	G40	psi & 0-2,000	L40	psi & 0-200,000						
P41	0-40,000	D41	psi & 0-2,800	G41	psi & 0-2,800	L41	psi & 0-280,000						
P42	0-50,000	D42	psi & 0-3,500	G42	psi & 0-3,500	L42	psi & 0-350,000						

Don't See The Range You Need? REOTEMP has thousands of specialty dial ranges available and will work with you to create a custom range, just contact REOTEMP customer service.

PRESSURE GAUGE RANGES AND CODES

SPECIAL RANGE TYPES

Receiver Ranges			Refrigerant Ranges			Tank Level Ranges	
Code	Element	Dial Range	Code	Dial Range	Refrigerant	Code	Range
P60	3-15 psi	0-100%	N06	-30inHg to 160 psi	Ammonia	F14	0-24ft H_2O
P61	3-15 psi	0-10 sq rt	R06	-30inHg to 160 psi	R134A	F15	0-30ft H_2O
P62	3-15 psi	0-100% & 0-10 sq.rt.	R06A	-30inHg to 160 psi	R22	F15C	0-40ft H_2O
			R06C	-30inHg to 160 psi	R404A	F16	0-60ft H_2O
			N07	-30inHg to 200 psi	Ammonia	F165	0-100ft H_2O
			N08	-30inHg to 300 psi	Ammonia		

LOW PRESSURE RANGES (PC SERIES ONLY)

Low Pressure Ranges									
inH_2O		oz/in^2		inH_2O & oz/in^2		mbar		psi	
Code	Range	Code	Range	Code	Range	Code	Range	Code	Range
P50	0-10 inH_2O	Z50	0-6 oz/in^2	Q50Z	0-10 inH_2O & 0-6 oz/in^2				
P51	0-15	Z51	0-8			M51	0-40 mbar		
P49	0-20	Z49	0-10	Q49C	0-20 & 0-12				
P515	0-25	Z52E	0-15						
P52	0-30			Q52N	0-30 & 0-18	M521	0-70	I52	0-1 psi
P525	0-40	Z52	0-20	Q525W	0-40 & 0-24	M525	0-100		
P53	0-60	Z53	0-30	Q53	0-60 & 0-35	M53F	0-150	I53	0-2
P54	0-100	Z54	0-60	Q54B	0-100 & 0-60	M54	0-250	I54	0-3
P55	0-160					M55	0-400	I55	0-5
P56	0-200	Z56	0-100	Q56C	0-200 & 0-115	M56	0-500	I56	0-7
Vacuum Ranges									
P88	-10-0 inH_2O	Z88	-6-0 oz/in^2	Q88	-10/0 inH_2O & -6/0 oz/in^2				
P90	-30-0	Z90	-20-0	Q90	-30/0 & -18/0	M905	-100-0 mbar	I90	-1-0 psi
P91	-60-0	Z91	-30-0	Q91	-60/0 & -35/0	M94	-200-0	I91	-2-0
P92	-100-0	Z92	-60-0	Q92	-100/0 & -60/0	M95	-400-0		
Compound Ranges									
P7A	-5/0/5 inH_2O	Z7A	-3/0/3 oz/in^2			M71	-20/0/20 mbar		
P70	-10/0/10			Q70C	-10/0/10 inH_2O & -6/0/6 oz/in^2	M72E	-30/0/30		
P71	-15/0/15					M72	-40/0/40		
P72	-20/0/20	Z72	-10/0/10	Q72C	-20/0/20 & -12/0/12			I73	-1-0-1 psi
P73	-30/0/30			Q73C	-30/0/30 & -18/0/18	M735	-100/0/100	I74	-2-0-2
P74	-60/0/60	Z745	-30/0/30					I55U	-3/0/3
P75	-100/0/100			Q75B	-100/0/100 & -60/0/60			P14C	-5/0/5

DIFFERENTIAL PRESSURE RANGES (DP GAUGES ONLY)

psid		inH_2Od		bard		mbard		kPad	
Code	Range	Code	Range	Code	Range	Code	Range	Code	Range
PD1	0-1 psid	ID10	0-10 inH_2Od	BD1	0-1 bard	MD40	0-40 mbard	AD2.5	0-2.5 kPad
PD3	0-3	ID20	0-20	BD1.6	0-1.6	MD60	0-60	AD6	0-6
PD5	0-5	ID30	0-30	BD2.5	0-2.5	MD100	0-100	AD10	0-10
PD10	0-10	ID50	0-50	BD4	0-4	MD160	0-160	AD25	0-25
PD20	0-20	ID100	0-100	BD6	0-6	MD250	0-250	AD40	0-40
PD50	0-50	ID150	0-150	BD7	0-7	MD400	0-400	AD100	0-100
PD100	0-100	ID200	0-200	BD11	0-11	MD600	0-600	AD250	0-250
PD200	0-200	ID400	0-400	BD55	0-55	MD1000	0-1000	AD700	0-700
PD6000	0-6000			BD400	0-400				

STANDARD DIAL LAYOUTS

STANDARD DIAL LAYOUTS

	PD/PG/PM15		PD/PG/PM20		PD/PG/PM25		PG/PM40		PR25		PR35		PR40		PR60		PT45	
Range (psi)	Figure	Minor	Figure	Minor	Figure	Minor	Figure	Minor	Figure	Minor	Figure	Minor	Figure	Minor	Figure	Minor	Figure	Minor
10									1	0.1								
15	3	0.5	3	0.2	3	0.2	3	0.2	1	0.25	3	0.2	3	0.2	3	0.2	3	0.2
30	5	0.5	5	0.5	5	0.5	5	0.5	5	0.5	5	0.5	5	0.2	5	0.2	5	0.2
60	10	1	10	1	10	1	10	1	10	1	10	1	5	0.5	5	0.5	5	0.5
100	10	2	20	2	10	2	10	1	10	1	20	2	10	1	10	1	10	1
160	20	2	20	2	20	2	20	2	20	2	20	2.5	20	1	20	1	20	1
200	50	5	50	5	50	5	20	2	20	2	50	5	20	2	20	2	20	2
300	50	5	50	5	50	5	50	5	50	5	50	5	50	2	50	2	50	2
400	100	10	20	2	100	10	50	5	50	5	100	10	50	5	50	5	50	5
600	100	10	100	10	100	10	100	10	100	10	100	10	50	5	50	5	50	5
800	200	20	100	10	200	20	100	10	100	10	100	10	100	10	100	10	100	10
1000	200	20	200	25	100	20	100	10	100	10	200	20	100	10	100	10	100	10
1500	300	20	300	20	300	20	300	20	300	25	300	20	300	20	250	20	300	20
2000	500	50	500	50	500	50			200	20	500	50	200	20	200	20	200	20
3000	500	50	500	50	500	50	500	50	500	50	500	50	500	20	500	20	500	20
4000			1000	100	1000	100			1000	100			500	50	500	50	500	50
5000			1000	100	1000	100	500	50	500	100	1000	100	500	50	500	50	500	50
6000			1000	100	1000	100	1000	100	100	100	1000	100	1000	50	1000	50	1000	50
8000			1000	100					100	100			1000	100	1000	100	1000	100
10000									2000	200	2000	200	1000	100	1000	100	1000	100
15000									3000	200			3000	200	2500	200	3000	200
20000													2000	200	2000	200	2000	200
30 - 0 "Hg	5	0.5	5	0.5	5	0.5	5	0.5	5	0.5	5	0.5	5	0.2	5	0.2	5	0.5
30 - 0 - 15	10/5	1/.5	10/5	5/.5	10/5	1/.5	10/5	1/.5	10/5	1/.5	10/5	1/.5	10/5	1/.5	10/5	1/.5	10/5	1/.5
30 - 0 - 30	10	2/1	10	2/1	10	2/1	10/5	1/.5	10	2/1	10/5	1/.5	10/5	1/.5	10/5	1/.5	10/5	1/.5
30 - 0 - 60	30/10	2/2	30/20	2/2	10	2	10	2/2	10	2	10	2/1	10	2/1	10	2/1	10	2/1
30 - 0 - 100					10/20	.5/2			30/20	5/2	30/20	5/2	30/20	5/2	30/20	5/2	30/10	2/1
30 - 0 - 160					30/20	5/2			30/20	5/2	30/20	5/2	30/20	5/2	30/20	5/2	30/20	5/2
30 - 0 - 200					30/20	5			30/50	5	30/20	5	30/20	5/2	30/20	5/2	30/20	5/2
30 - 0 - 300					30/50	10/5			30/50	10	30/50	5	30/50	5/5	30/50	5	30/50	5/5

Note: Dial layouts are subject to change at any time, please confirm with REOTEMP if a specific dial layout is requested. Hi-Vis™ and custom dials have varying figure and minor graduations. Please contact REOTEMP for dial graduation requirements that differ from REOTEMP standard.

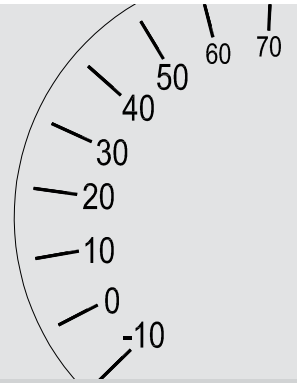

Figure Intervals

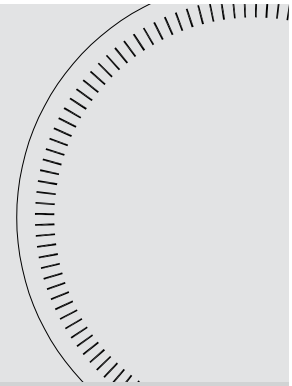

Minor Graduations

PRESSURE GAUGE DIAL OPTIONS

YouTube Visit reotemp.com/youtube

- ✓ In-depth Videos on our Customization Options
- ✓ Product Demonstration Videos

Hi-Vis™

REOTEMP's Hi-Vis dial increases the visibility of dial gauges in low-light environments and at a distance. Hi-Vis dials are often used in areas where gauge readings are paramount to safety of the process. They can also be used to differentiate between two different process lines within a facility.

-HV	Hi-Vis™ High Visibility Dial
Availability	PR, PT, PG-S and PC

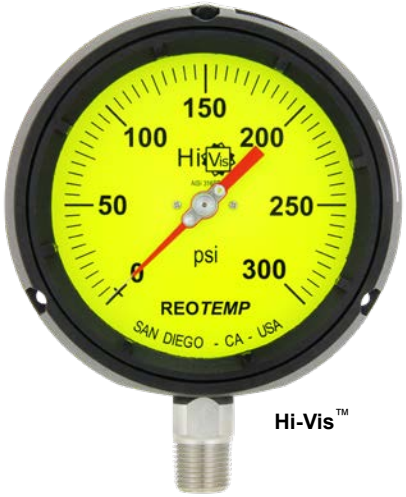

Hi-Vis™

COLOR BANDS & COLOR PIES

Color bands and pies highlight a specific range on the gauge so that it is immediately apparent if the process falls within a critical pressure range.

-CB	Color Band (Specify Colors and Ranges)
-CP	Color Pie (Specify Colors and Ranges)
Availability	PR, PT, PG, PC and DP Gauges

Color Band

Color Pie

CUSTOM LOGO DIAL

Pressure gauge dials offer a unique opportunity to communicate critical information, highlight installation specifications, or promote an OEM or end-user brand.

-CL	Custom Logo Dial
Availability	PR, PT, PG, PC and DP Gauges, Additional Models Available as Factory Order

DIAL MARKING

Add text, a serial number, tag number, equipment class, or other text to the gauge dial face.

-DM	Dial Marking
Availability	PR, PT, PG, PC and DP Gauges, Additional Models Available as Factory Order

Custom Logo

PRESSURE GAUGE OPTIONS

CASE FILL

Case Fill Ambient Temperature Limits		
-G	Glycerin USP	40°F to 140°F
-W	Glycerin/Water (65/35)	-40°F to 140°F
-S	Silicone (1000cst)	-50°F to 150°F
-T	Teflon Coated Movement	-40°F to 150°F

POINTER

Min/Max Pointer with Fixed Adjustment

Red Set Hand

-MP	Min/Max Pointer with Fixed Adjustment Screw
-MQ	Min/Max Pointer with Tamper-proof Cap and Key
-RH	Red Set Hand, Manual Adjustment, Not a Drag Pointer (PT45P Case Only)
-RP	Red Pointer (STD with Hi-Vis™ Dial)

Availability PR25, PR40, PR60, PT45P, PG25, & PG40S

ELECTRICAL SWITCH CONTROLS

The electrical contacts option adds a convenient and durable switch option to the mechanical dial pressure gauge. The set pointer can be easily adjusted using a key on the outside of the dial. The pressure gauge pointer drags the switching contacts to either an open or closed position, based on how the user adjusts the contacts.

-EC	Electrical Contacts

Availability PR40 and PT45P (Case not liquid fillable with contacts)

Electrical Contacts

Recommended Contact Loads			
Voltage	Resistive		Inductive
	DC mA	AC mA	AC mA
220	40	45	25
110	80	90	45
48	120	170	70
24	200	350	100

Maximum load at 250V = 0.6A, for larger loads or to reverse action of switches, use of a relay is recommended.

CALIBRATION OPTIONS

- ✓ All gauge testing and calibrations are performed using NIST-traceable reference equipment.
- ✓ A point certificate (**-C3**, **-C5**, etc.) comes with a sticker on the case or lens with a unique test number and a calibration report with logged points.
- ✓ Upgraded accuracy (**-R1**, **-R2**, **-R5**) includes a notation on the dial and a calibration sticker, but no logged points.
- ✓ A calibration sticker (**-CS**) includes a sticker on the case or lens with a unique test number, but no logged points.

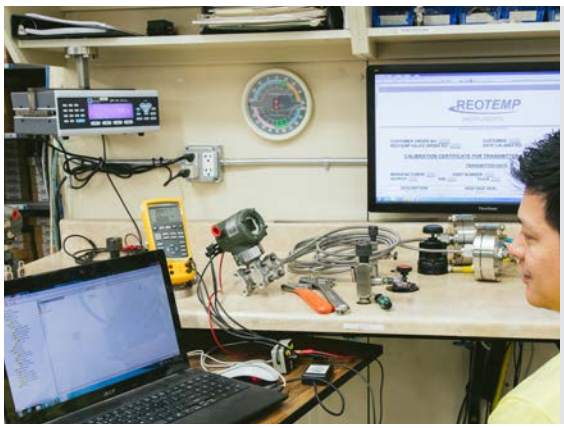

ASME B40.100

All REOTEMP pressure gauges are designed, manufactured, and calibrated to ASME B40. All calibration reference equipment is NIST-traceable.

REOTEMP INSTRUMENTS

PRESSURE GAUGE OPTIONS

		Heavy-Duty Industrial Gauges				Process Gauges			Stainless Steel Case Industrial Gauges			Commercial Gauges		Low Pressure Capsule Gauges			Test Gauges
Part #	Description	PR25	PR35	PR40	PR60	PT45P	PT45T	PI45	PM	PG**C	PG**S	PD15/20/25	PD35/40	PC25N	PC25S	PC40/45/60	PL60/45
	CASE FILL OPTIONS																
-G	Glycerin Filled Case	✓	✓	✓	✓	✓	✓	N/A	✓	✓	✓	N/A	N/A	N/A	N/A	N/A	N/A
-W	Glycerin Water Filled Case (65/35)	✓	✓	✓	✓	✓	✓	N/A	✓	✓	✓	N/A	N/A	N/A	N/A	N/A	N/A
-S	Silicone Filled Case	✓	✓	✓	✓	✓	✓	N/A	✓	N/A	✓	N/A	N/A	N/A	N/A	N/A	N/A
-T	Teflon-coated Movement (No case fill)	✓	✓	✓	✓	✓	✓	✓	N/A	N/A	N/A	N/A	N/A	N/A	✓	✓	✓
-I	Inert Case Fill	✓	✓	✓	✓	✓	✓	N/A	N/A	N/A	N/A	N/A	N/A	N/A	N/A	N/A	N/A
	LENS OPTIONS																
-P	Plastic Lens	STD	✓	✓	✓	✓	✓	STD	STD	STD	✓	✓	MQ	✓	✓	✓	✓
-T	Tempered Safety Glass Lens	✓	STD	STD	STD	STD	STD	N/A	N/A	N/A	STD	N/A	N/A	N/A	STD	STD	STD
-S	Laminated Safety Glass Lens	✓	✓	✓	✓	✓	✓	N/A	N/A	N/A	✓	N/A	N/A	N/A	✓	✓	✓
-G	Plain Glass	N/A	N/A	N/A	N/A	N/A	N/A	N/A	MQ	MQ	N/A	MQ	STD	N/A	N/A	N/A	N/A
	POINTER OPTIONS																
-RP	Red Pointer	✓	✓	✓	✓	✓	✓	✓	N/A	N/A	✓	N/A	N/A	N/A	✓	✓	✓
-MP	Min/Max Pointer (Drag Hand)†	✓	N/A	✓	✓	✓	N/A	N/A	N/A	N/A	✓	N/A	N/A	N/A	N/A	N/A	N/A
-MQ	Min/Max Pointer (Tamper-proof)†	✓	N/A	✓	✓	✓	N/A	N/A	N/A	N/A	✓	N/A	N/A	N/A	N/A	N/A	N/A
-RH	Red Set Hand (Manual Adjustment)	N/A	N/A	N/A	N/A	✓	N/A	N/A	N/A	N/A	N/A	N/A	N/A	N/A	N/A	N/A	N/A
-EC	Electrical Contacts	N/A	N/A	✓	N/A	✓	N/A	N/A	N/A	N/A	N/A	N/A	N/A	N/A	N/A	N/A	N/A
	DIAL OPTIONS																
-CL	Custom Logo Dial	✓	✓	✓	✓	✓	✓	✓	MQ	MQ	✓	MQ	MQ	MQ	✓	✓	✓
-HV	Hi-Vis Dial	✓	✓	✓	✓	✓	✓	✓	N/A	N/A	✓	N/A	N/A	N/A	✓	✓	N/A
-CB	Color Band	✓	✓	✓	✓	✓	✓	✓	MQ	MQ	✓	MQ	MQ	MQ	✓	✓	N/A
-CP	Color Pie	✓	✓	✓	✓	✓	✓	✓	MQ	MQ	✓	MQ	MQ	MQ	✓	✓	N/A
-DM	Dial Marking	✓	✓	✓	✓	✓	✓	✓	MQ	MQ	✓	MQ	MQ	✓	✓	✓	✓
-LP	Removable Lens Protector	N/A	N/A	N/A	N/A	✓	✓	✓	N/A	N/A	N/A	N/A	N/A	N/A	N/A	N/A	N/A
	CALIBRATION OPTIONS																
-R1	Upgrade to 1% FS Accuracy	✓	✓	STD	STD	N/A	N/A	N/A	N/A	N/A	✓	N/A	N/A	N/A	N/A	N/A	N/A
-R2	Upgrade to 0.5% FS Accuracy	N/A	N/A	✓	✓	STD	STD	STD	N/A	N/A	N/A	N/A	N/A	N/A	N/A	N/A	N/A
-R5	Upgrade to 1.5% FS Accuracy	✓	✓	N/A	N/A	N/A	N/A	N/A	N/A	N/A	N/A	N/A	N/A	N/A	✓	✓	N/A
-C1	1pt. NIST Calibration Cert	✓	✓	✓	✓	✓	✓	✓	✓	✓	✓	✓	✓	✓	✓	✓	N/A
-C3	3pt. NIST Calibration Cert	✓	✓	✓	✓	✓	✓	✓	✓	✓	✓	✓	✓	✓	✓	✓	N/A
-C5	5pt. NIST Calibration Cert	✓	✓	✓	✓	✓	✓	✓	✓	✓	✓	✓	✓	✓	✓	✓	N/A
-CX	10pt. NIST Calibration Cert	✓	✓	✓	✓	✓	✓	✓	✓	✓	✓	✓	✓	✓	✓	✓	STD
-CS	Calibration Sticker (No logged pts.)	✓	✓	✓	✓	✓	✓	✓	✓	✓	✓	✓	✓	✓	✓	✓	N/A
	TAG OPTION																
-TS	Stainless Steel Tag (1-10 Characters)	✓	✓	✓	✓	✓	✓	✓	✓	✓	✓	✓	✓	✓	✓	✓	✓
-TM	Stainless Steel Tag (11-80 characters)	✓	✓	✓	✓	✓	✓	✓	✓	✓	✓	✓	✓	✓	✓	✓	✓
-TP	Paper Tag	✓	✓	✓	✓	✓	✓	✓	✓	✓	✓	✓	✓	✓	✓	✓	✓
	CERTIFICATION OPTIONS																
-CM	General Material Conformance	✓	✓	✓	✓	✓	✓	✓	✓	✓	✓	✓	✓	✓	✓	✓	✓
-NC	Certificate of NACE Compliance	✓	✓	✓	✓	✓	✓	✓	N/A	N/A	N/A	N/A	N/A	N/A	✓	✓	✓
-PM	Positive Material Identification Certificate (PMI)	✓	✓	✓	✓	✓	✓	✓	✓	✓	✓	✓	✓	✓	✓	✓	✓
-HT	Hydrostatic Test per ASME B31.3 (5 min)	✓	✓	✓	✓	✓	✓	✓	✓	✓	✓	✓	✓	✓	✓	✓	✓
-LC	Argon Leak Check Certificate	✓	✓	✓	✓	✓	✓	✓	✓	✓	✓	✓	✓	✓	✓	✓	✓
	CLEANING OPTIONS																
-DG	Degreased - Wiped Clean of Oils, Shipped in Sealed Bag	✓	✓	✓	✓	✓	✓	✓	N/A	N/A	✓	N/A	N/A	✓	✓	✓	✓
-OX	Cleaned for Oxygen Service per ASME B40.1	✓	✓	✓	✓	✓	✓	✓	MQ	MQ	✓	MQ	MQ	✓	✓	✓	✓
-OY	Cleaned for Oxygen Service per MIL-STD-1330D	✓	✓	✓	✓	✓	✓	✓	N/A	N/A	✓	N/A	N/A	✓	✓	✓	✓
	OTHER OPTIONS																
-NR	No Restrictor Screw	✓	✓	✓	✓	✓	✓	✓	N/A	N/A	N/A	N/A	N/A	N/A	N/A	✓	N/A
-FI	Dry Gauge Shipped with Fill Plug Installed	N/A	N/A	N/A	N/A	✓	N/A	N/A	N/A	N/A	N/A	N/A	N/A	N/A	N/A	N/A	N/A

✓	Indicates that the option is available with the model.	N/A	Indicates the option is not available with this model.
STD	Indicates standard options with no additional cost.	MQ	Minimum order quantity applies.

†This option is only available with a plastic lens.

DIAPHRAGM SEALS

Manufactured in the USA under strict ISO 9001 quality standards, REOTEMP offers a broad variety of diaphragm seals for the industrial markets. REOTEMP Diaphragm Seals are carefully designed, built, and tested to maximize performance, increase instrument durability, and assure operator safety. Along with superior product quality, REOTEMP is proud to offer responsive customer service, intuitive online product configurators, and the industry's quickest lead times.

Diaphragm Seals are used in applications where the pressure sensor requires isolation from the process media. These applications may be corrosive, high temp, clogging, or require a sanitary fluid to remain captured in the piping or vessel. Rather than the process fluid interfacing with the pressure sensor, the pressure is exerted onto the flexible diaphragm and transmitted hydraulically to the instrument through the fill fluid. When properly mounted and filled a diaphragm seal assembly will have minimal effect on the instrument's performance.

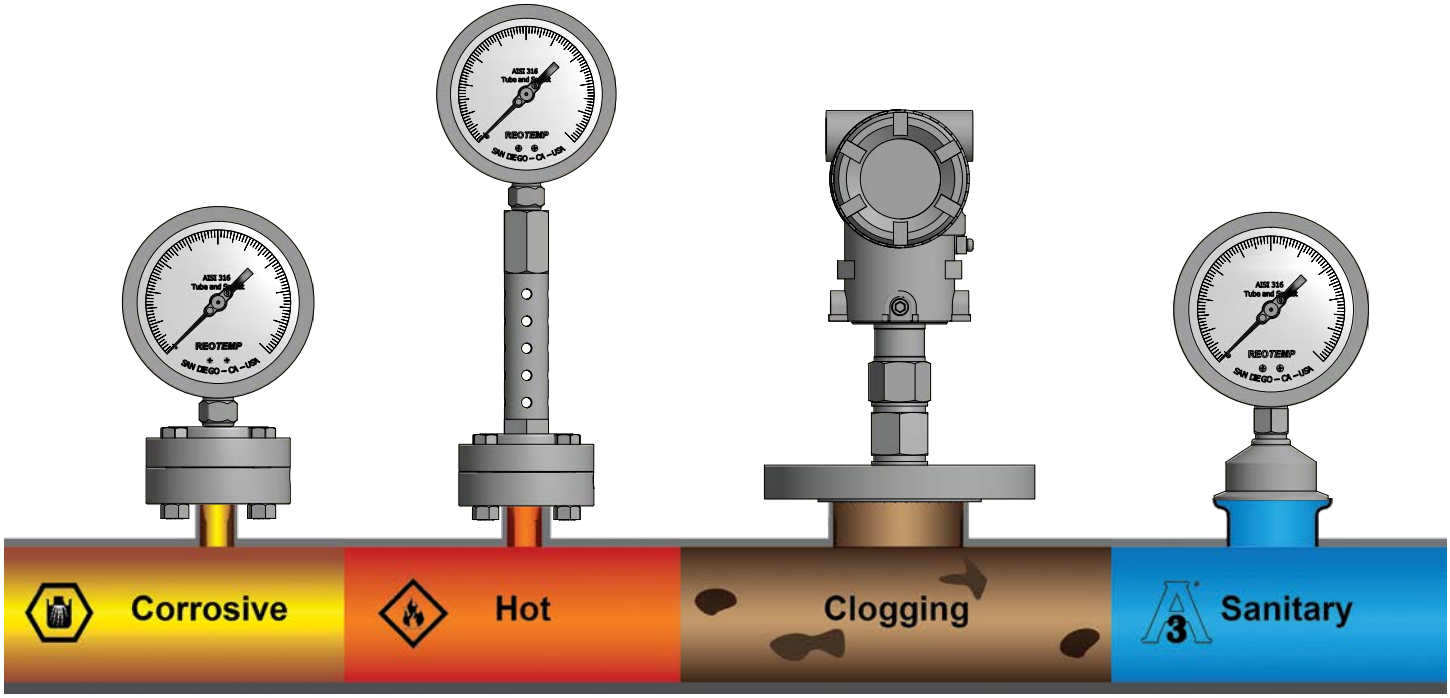

APPLICATION CONSIDERATIONS

REOTEMP Diaphragm Seal Assemblies are carefully designed, built, and tested to maximize performance, increase instrument lifespan, and assure operator safety. The following should be considered when specifying a diaphragm seal:

1. Instrument Considerations

- Is there sufficient displacement to drive through its full range?
- Is the diaphragm sensitive enough for the measuring range and accuracy grade of the instrument?

2. Diaphragm Seal Mounting

- How will the diaphragm seal mount to the process? Threaded? Flanged? Clamped?
- How will the instrument mount to the diaphragm seal? Threaded? Welded?
- Will the instrument be mounted directly to the seal or with capillary?

3. Process Characteristics

- What are the pressure and temperature limits?
- Are there issues with clogging or high viscosity?
- Is there severe shock and pulsation?
- Is the process fluid compatible with the wetted material and gasket?

4. Ambient Characteristics

- Are there extreme or fluctuating ambient temperatures?
- Is the outside environment corrosive?

5. Vacuum Considerations

- Will the assembly be operating in deep vacuum (< 5psia)? If yes, contact the factory with process specifications.

Questions? If you require application assistance, please contact REOTEMP customer service or your local REOTEMP distributor.

REOTEMP SEAL FEATURES

COOLING TOWERS

High process temperatures are damaging to pressure instrument performance and could pose an imminent safety risk. REOTEMP cooling towers provide the best option for extending instrument lifespan, improving performance and minimizing safety risk.

See page 57 for diaphragm seal mounting codes or page 111 to purchase separately.

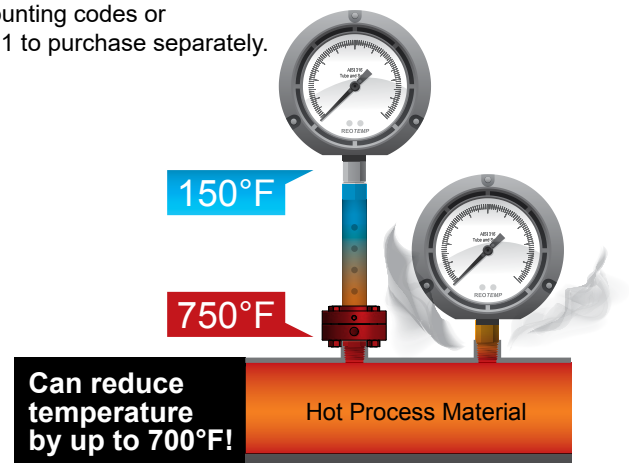

PULSATION PROTECTION

Pulse+™

Process media pulsation is one of the most common causes of pressure gauge failure. REOTEMP's proprietary diaphragm seal feature, Pulse Plus™ dramatically reduces the effects of pulsation on mechanical pressure instruments.

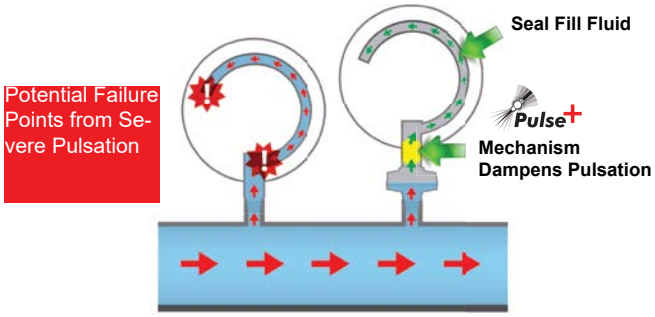

Specify with option code **-PP** on most diaphragm seal models when a seal is being mounted to a REOTEMP pressure gauge.

PRESSURE AND TEMPERATURE REFERENCE TABLES

Threaded Diaphragm Seal Temperature Rating

Process Temp °F	MWP 1500 psi	MWP 2500 psi	MWP 5000 psi	MWP 10000 psi
-40 to 100	1500	2500	5000	10000
200	1290	2150	4300	8600
300	1175	1950	3900	7800
400	1090	1800	3600	7200
500	1000	1650	3300	6600
650	910	1500	3000	6000

Temperature Dissipation by Diaphragm Seal Mount Type

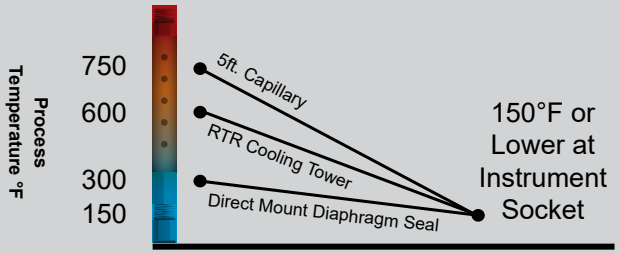

Note: Figures are approximate, based on installation with significant ambient airflow.

ANSI B16.5 Flange Rating (Temperature/Pressure)

	Process Temp °F	Class 150 psi	Class 300 psi	Class 600 psi	Class 1500 psi
316SS	-40 to 100	275	720	1440	3600
	200	230	600	1200	3000
	300	205	540	1080	2700
	400	190	495	995	2485
	500	170	465	930	2330
	650	125	430	860	2150
Carbon Steel	-40 to 100	285	740	1480	3705
	200	260	675	1350	3375
	300	230	655	1315	3280
	400	200	635	1270	3170
	500	170	600	1200	2995
	650	125	535	1075	2685

COMMON CONFIGURATIONS

The pressure instrument and diaphragm seal assemblies shown below are examples of completely filled and tested assemblies and their corresponding part numbers.

Instrument
PT45P1A2P20-G-T-HV (pg.7)

Seal
W51522SSS-TKDTD-AS (pg.59)

Application
The most common gauge seal assembly for threaded connections. For use with corrosive, clogging or moderately hot process media.

Instruments
PR35S1A4D25-D-T (pg.3)
TG1P25-1A4A00 (pg.101)

Seal
DSTC15SS4-TRM-AG (pg.79)

Application
For use in a sanitary or clean-in-place application where the user would like both a mechanical dial pressure gauge and electronic output on the same connection port.

Instrument
PC40S1A4M250-D-T (pg.13)

Seal
W7254R21SSS-TDTD-AS (pg.69)

Application
Low pressure gauge with a high accuracy diaphragm seal. For use with corrosive gas or liquid on a flanged connection.

Instrument
Customer Supplied In-Line Smart Pressure Transmitter

Seal
MS8QWM2XS-RTR-BH-R1 (pg.77)

Application
For use in high temperature service where a diaphragm seal is required to protect the pressure transmitter from process temperature as high as 750°F.

Instrument
PT45P1A2P17-D-T-TS (pg.7)

Seal
W51523SSC-TKA25-AS (pg.59)

Application
For use where the pressure measurement point is a long distance from where the operator can conveniently and safely read the gauge.

Instrument
Customer Supplied dP Transmitter

Seal
W9FFWR31S-W20-AS-RR (pg.71)

Application
For use monitoring tank level, measuring flow across an orifice plate, measuring pressure drop across a valve or filter, and other dP application. Flush diaphragm seals are most commonly used with process media that clogs or coagulates in limited flow areas and dead legs.

SMART TRANSMITTER ATTACHMENT

HOW TO ORDER: Unbalanced System Example

W9FFWR31S-DWD-AS-**RB**

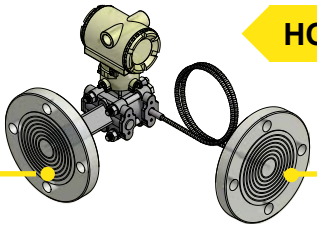

W9FFWR31S-B0S-AS-**RL**

DIFFERENTIAL PRESSURE ASSEMBLY

Balanced System A complete assembly with one part number that includes two diaphragm seals, two capillaries, two fills, and one complete assembly calibration certificate.

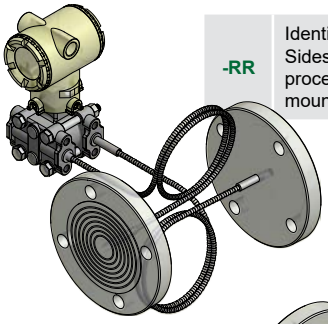

-RR	Identical system on HP and LP Sides, capillary exit through process connections. Capillary mounts only.

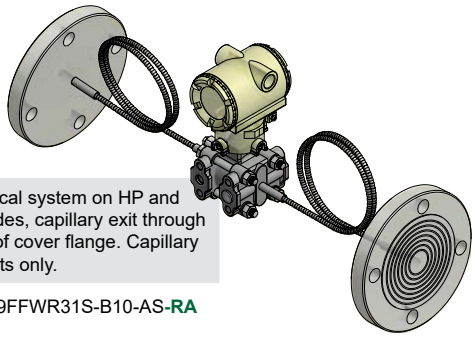

-RA	Identical system on HP and LP sides, capillary exit through face of cover flange. Capillary mounts only.

Example: W9FFWR31S-B10-AS-**RA**

Unbalanced DP System Where seal, mount, capillary, or fill is not identical. A complete assembly includes one diaphragm seal on the HP side AND one diaphragm seal on the LP side.

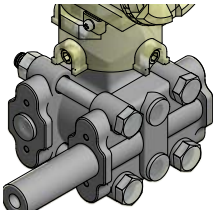

-RH	Mount via Process Connections
Side	High Pressure

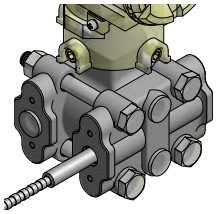

-RL	Mount via Process Connections
Side	Low Pressure

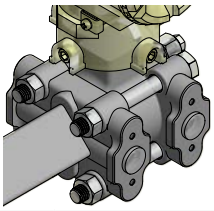

-RB	Mount via Face of Cover Flange
Side	High Pressure

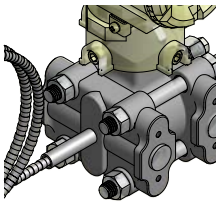

-RC	Mount via Face of Cover Flange
Side	Low Pressure

GAUGE PRESSURE ASSEMBLY

In Line Pressure Transmitter

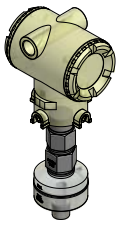

-R1	Mount to In-Line Gauge Pressure Transmitter. Direct or remote mount.

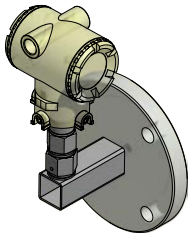

-R4	Horizontal Mount (Tank Mount) to In-Line Gauge Pressure Transmitter. Direct mount only.

Traditional Mount for Gauge Pressure Seal mount on one side only, other side is vented.

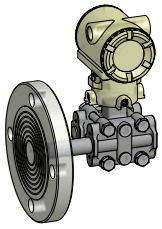

-R2	Instrument mount through process connections, HP Side. Use “R3” if mounting to LP side

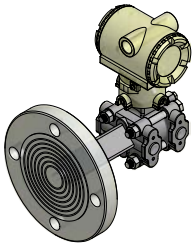

-R8	Instrument mount through face of cover flange, HP Side. Use “R9” if mounting to LP Side

DIAPHRAGM SEAL ASSEMBLY TO SMART TRANSMITTERS

REOTEMP specializes in the unique craft of assembling diaphragm seals to field transmitters for the purpose of measuring pressure, differential pressure, level, and flow. As a trusted supplier to many of the world's leading transmitter manufacturers, REOTEMP can assemble a diaphragm seal system to virtually any make or model transmitter. Every transmitter mount includes the features below to ensure superior performance and durability for every assembly. REOTEMP also offers repair, refurbishment or replacement of used transmitters with remote seals.

STANDARD FEATURES ON ALL REOTEMP ASSEMBLIES

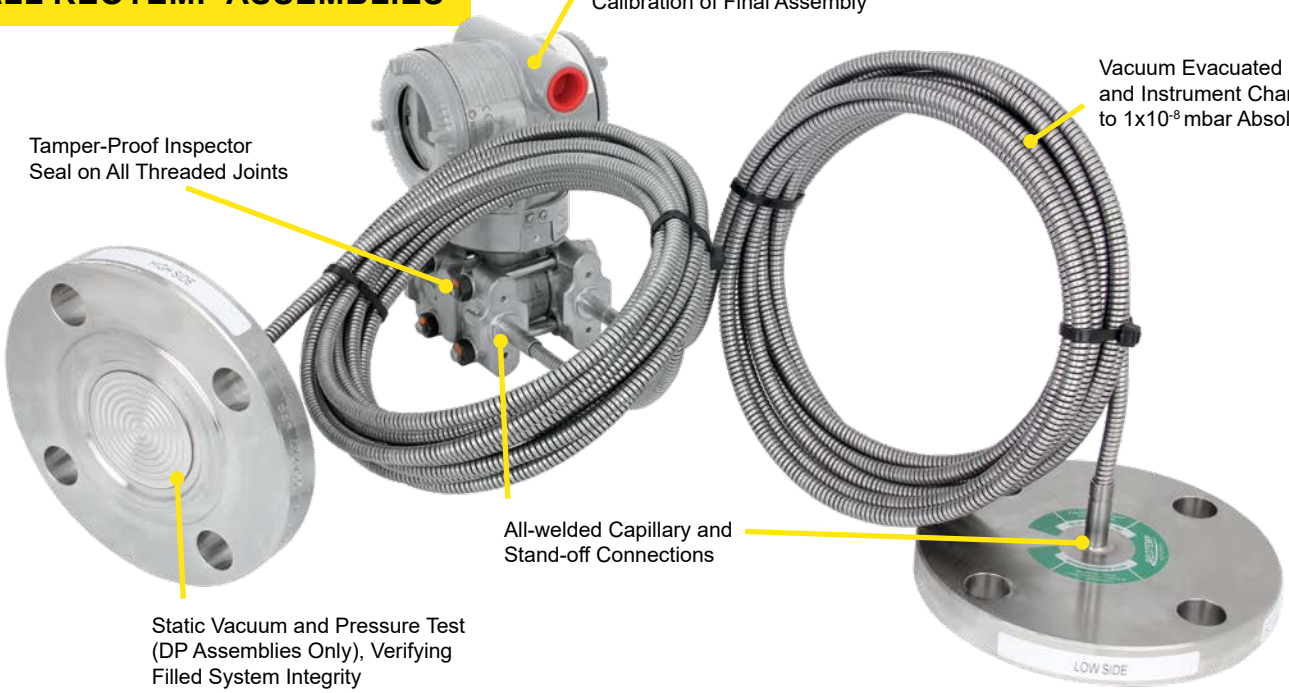

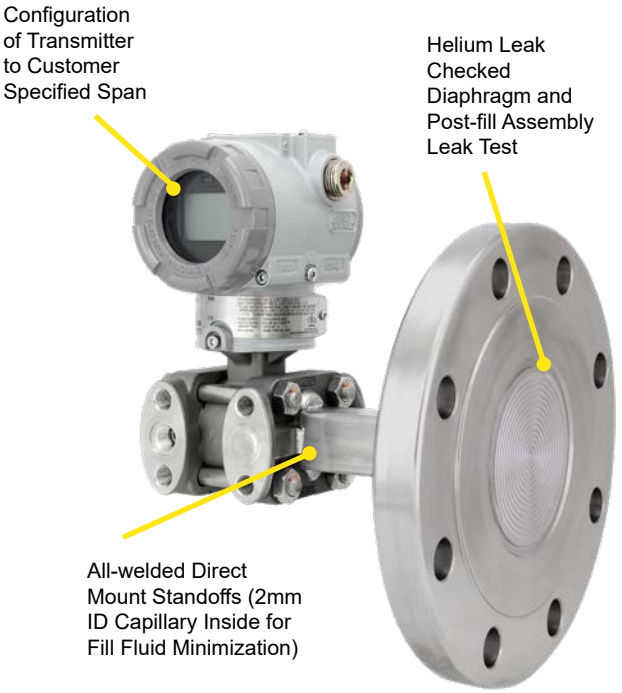

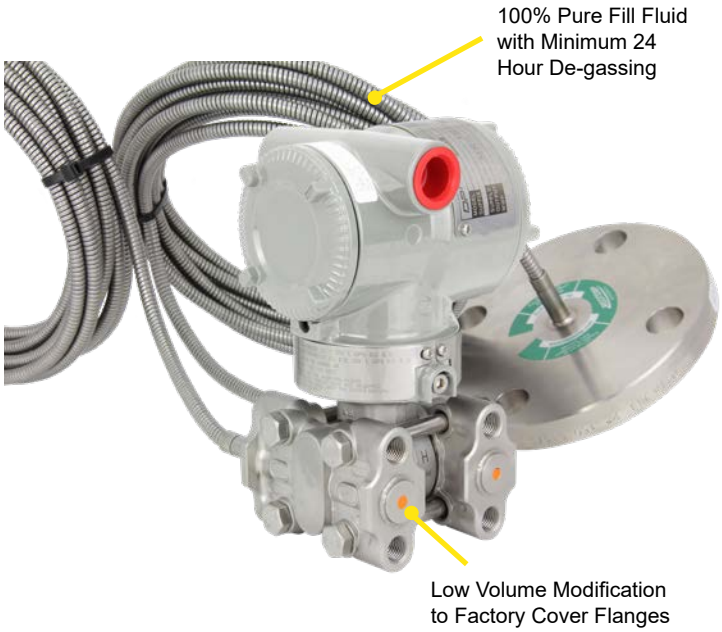

INSTRUMENT MOUNTING CONFIGURATIONS

DIRECT MOUNT

Direct Mounting a pressure gauge, switch, or transmitter is the most common diaphragm seal assembly.

Threaded

- Allows Replaceability
- High Quality Thread Sealant
- Inspector Seal

Welded

- Tamper Proof
- Rated for High Temps
- Leak Resistant

Code	Description	Max. Temp
-DTD	Threaded Instrument Connection	400°F
-DWD	Welded Instrument Connection	600°F

Assembly Notes: Welded connection recommended for pressure exceeding 1,500 psi for purposes of leak prevention.

REMOTE MOUNT

Remote Mounting a pressure instrument using flexible capillary is a common mounting method when the point of measurement is in a hazardous or inconvenient location.

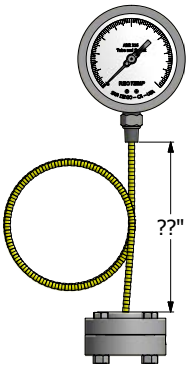

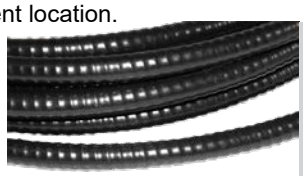

PVC Coated SS Flex Armor

SS Flex Armor

Code	Description	Max. Temp
-P??	PVC Coated SS Armor, Threaded to Seal	400°F
-W??	PVC Coated SS Armor, Welded to Seal	600°F
-A??	SS Flexible Armor, Threaded to Seal	400°F
-B??	SS Flexible Armor, Welded to Seal	750°F
Note: ?? = Length in feet (e.g. 05 = 5 feet)		

Assembly Notes: Capillary has a 2mm inner diameter unless specified differently by customer. Ambient temp limit of PVC coated armor is 250ºF. Standard instrument connection is threaded (Smart Transmitters are welded), unless specified by customer.

COOLING ELEMENTS

Used in either high temp or cold temp applications, Cooling Elements mounted above diaphragm seals quickly normalize fluid temperature toward ambient. This protects the pressure instrument while still maintaining the convenience of a direct mount.

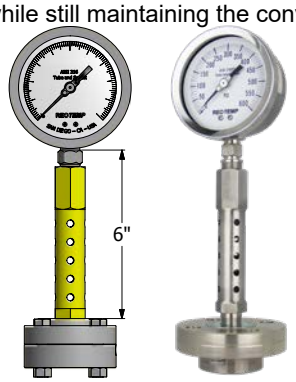

-RTR

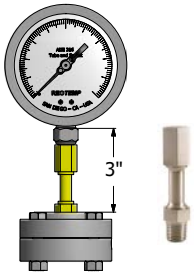

-STW

Code	Description	Max. Temp
-RTR	6” Cooling Tower	750°F
-STW	3” Cooling Standoff	600°F

Assembly Notes: Cooling elements are welded to diaphragm seal. Instruments are threaded to cooling element unless specified. All lengths are nominal.

TREE ASSEMBLIES

Tree Assemblies offer the ability to mount two pressure instruments onto one diaphragm seal, allowing the user to gain both a local indication and a remote signal without adding an additional pipe insertion.

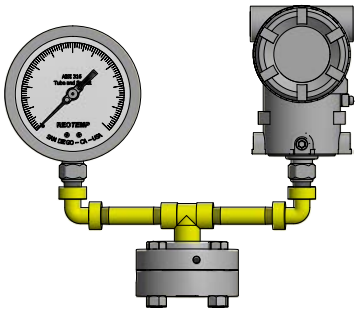

-TRE & -TRX

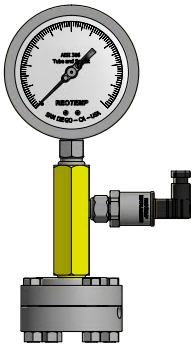

-TRM

Code	Description	Max. Temp
-TRE	Goal Post, Low Pressure Assembly (Max. 150 psi)	400°F
-TRX	Goal Post, Heavy Duty (Max. 3,000 psi)	600°F
-TRM	Compact Tree Assembly (Max. 3,000 psi)	600°F

Assembly Notes: Threaded joints are fully welded for consistent instrument orientation. Instrument connections are threaded unless specified by customer. Diaphragm seal must displace enough fluid to drive both instruments.

FILL GUIDE

Diaphragm seals are designed to protect pressure instruments from hot process media and corrosive chemicals while minimizing any negative effect on instrument accuracy and durability. A well-made diaphragm seal can achieve this goal only if it is properly assembled, filled, and tested. REOTEMP's highly trained technicians use state-of-the-art equipment so that every diaphragm seal assembly is filled and tested to assure optimal instrument performance:

- ✓ 24-hour Minimum Fluid De-gassing
- ✓ Evacuated Instrument Chamber Up to 10^{-8} mbar Absolute
- ✓ Complete Fill Integrity Check
- ✓ Fill-port Leak Test
- ✓ Post-fill Static Test
- ✓ Verification of Instrument Calibration
- ✓ High-temp Pipe Sealant Used on All Threaded Joints (Welded Joints Upon Request)
- ✓ Tamper-proof (Inspection Seal) Lacquer used on All Threaded Joints
- ✓ Sturdy Diaphragm Packaging Protection

Part Number Code	Name	Description	Temperature Range (Vacuum Service <5psia)	PulsePlus™	Viscosity cst @ ~77ºF	Specific Gravity @ ~77ºF	Thermal Expansion cc/cc/ºC
STANDARD FILL FLUID							
AS	Silicone DC200[1]	This is the standard fill fluid for most diaphragm seal applications.	-40ºF to 400ºF (-40ºF to 250ºF)	Yes	20	0.94	.00104
HIGH TEMP SILICONE							
BH	Silicone DC704[1]	Standard for Smart Transmitters and capillary systems. Performs well in applications with high temperature and a deep vacuum.	0ºF to 650ºF (0ºF to 450ºF)	No	44	1.07	.00077
B1	Silicone DC710[1]	Highest temperature rating; ideal for gauge seal assemblies. Too thick for capillary assemblies. Response time can become very slow in cold conditions.	50ºF to 750ºF (50ºF to 400ºF)	Yes	500	1.11	.00043
C8	Syltherm 800[2]	Low viscosity allows it to perform well in both low and high temperatures. Not recommended for vacuum service or at high temperatures when under low static pressure.	-40ºF to 750ºF (-40ºF to 150ºF)	No	9.5	0.93	.00136
B5	Silicone DC705[1]	Performs very well in high temperatures when under vacuum. The high viscosity and freezing point of this fluid makes it a poor choice for cold or outdoor installations without heat tracing.	50ºF to 675ºF (50ºF to 550ºF)	Yes	175	1.09	.00096
B2	Silicone DC550[1]	Similar high temperature performance as DC705, however it performs better at lower temperatures.	-40ºF to 575ºF (-40ºF to 400ºF)	No	125	1.07	.00076
FOOD GRADE							
AG	Glycerin USP	This is the standard fill fluid for most gauge seal assemblies for food, beverage, and pharmaceutical applications. Its high viscosity will cause very slow response at times in low temperature and outdoor installations.	60ºF to 450ºF (Not Suitable)	Yes	1100	1.26	.00061
BN	NEOBEE M20[7]	Low viscosity and a wide temperature range makes this the standard sanitary fill fluid for Smart Transmitters and capillary systems.	-10ºF to 400ºF (-10ºF to 200ºF)	No	10	0.92	.00101
BS	Food Grade Silicone	Highest temperature limit for food grade fluids. Because of its high viscosity it does not perform well in low temperatures.	20ºF to 550ºF (20ºF to 250ºF)	Yes	350	0.97	.00096
BP	Propylene Glycol	This is the fill fluid used when Glycol is called for on the customer specification. It has a very narrow temperature range.	0ºF to 200ºF (Not Suitable)	No	2.85	1.03	.00073
INERT (TYPICALLY FOR CHLORINE AND OXYGEN APPLICATIONS OR IN SILICONE-FREE ENVIRONMENTS)							
C1	Fomblin Y06[4]	Ideal inert fluid for transmitter applications. Relatively high vapor pressure above 200ºF. Not recommended for use in high temperature situations with low static pressure.	-40ºF to 450ºF (0ºF to 250ºF)	No	71	1.88	.00086
C2	Halocarbon 6.3[3]	Standard inert fluid used in gauge seal assemblies.	-40ºF to 400ºF (-40ºF to 200ºF)	Yes	6.3	1.97	.00084
C3	Halocarbon 1.8[3]	Typically used in low temperature applications because of its low viscosity.	-110ºF to 220ºF (-100ºF to 100ºF)	No	1.8	1.82	.00084
C4	Fluorolube FS-5[5]	Similar performance to Halocarbon 6.3, however not suitable for vacuum service.	-40ºF to 450ºF (Not Suitable)	No	5	1.86	.00087
SPECIALTY							
CK	Krytox 1506[6]	Specialty fill fluid, inert.	-40ºF to 350ºF (-40ºF to 300ºF)	No	62	1.88	.00095
BE	Ethylene Glycol	Occasionally used in annular (O-ring) seal assemblies.	-25ºF to 320ºF (Not Suitable)	No	30	1.10	.00062

1 Trademark Dow Corning
2 Trademark The Dow Chemical Company
3 Trademark Halocarbon Product Corporation
4 Trademark AUSIMONT S.P.A
5 Trademark Hooker Chemical Company
6 Trademark The Chemours Company FC, LLC
7 Trademark Stepan Specialty Products

Note: PulsePlus™ fill fluids may have different physical properties than specified. Chemical composition and temperature ranges do not vary.

THREADED OFFLINE WELDED DIAPHRAGM SEALS

REOTEMP's Threaded Offline Welded Diaphragm Seals are designed with an upper and lower housing bolted together with a diaphragm welded to the upper housing. This removable design allows for easy cleanout of the seal chamber, while still maintaining the system fill. The threaded offline diaphragm seal can be adapted to fit almost any pressure instrument and process application.

W51

W61

W5K

FEATURES / BENEFITS

- Welded Diaphragm for Maximum Durability
- Wide Variety of Diaphragm and Material Options
- Continuous-duty Disc Protects from Process Fluid Leaking in the Event of a System Breach
- Easy Cleanout of Diaphragm Cavity without Compromising Filled System

Standard Pressure

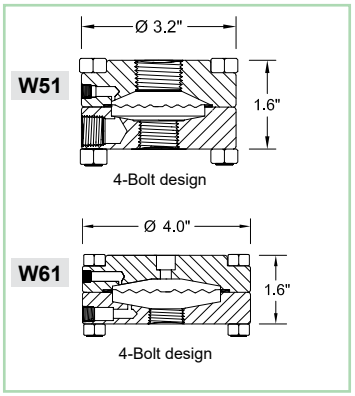

Heavy Duty

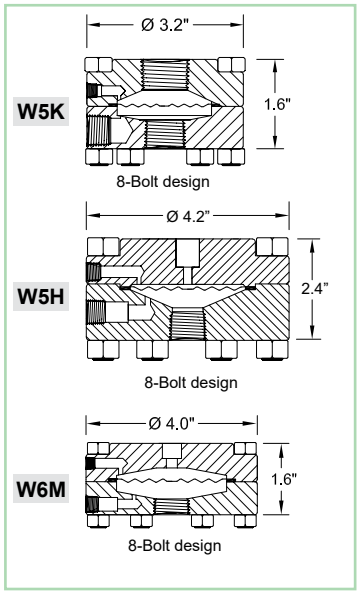

Note: All drawings depict a single 1/4" NPT Flush Port (optional). Drawing are not to scale. Contact REOTEMP customer service for more detailed drawings.

SPECIFICATIONS

Diaphragm	316SS, Hast C-276, Tantalum, Monel, or others
Lower Housing	316SS, Hast C-276, Monel, CPVC, or others
Gasket	PTFE, Grafoil, Kalrez, or Klinger
Upper Housing	316SS or Nickel-plated Carbon Steel

Process Temperature Limits

		W51/W61	W5K/W6M/W5H
Metallic Lower	PTFE Gasket	-110/350ºF	-110/400ºF
	Klinger Gasket	-110/450ºF	-110/500ºF
	Grafoil Gasket	-40/600ºF	-40/750ºF
Non-Metallic Lower		140ºF	N/A

Ambient Temperature Limits Determined by the pressure instrument.

Minimum Recommended Span

	W5	W6
2.5" & 3.5" Gauges	15 psi	200" H_2O
4", 4.5", & 6" Gauges	30 psi	200" H_2O
Transmitter (Gauge Pressure)	150" H_2O	60" H_2O
Transmitter (Differential Pressure)	300" H_2Od	60" H_2Od
Differential Pressure Gauge (D40/42 Only)	N/A	N/A

Weight

Note: Weights are approximate.

	Metallic Lower	Non-Metallic Lower
W51/W5K	3.5 lbs	2.5 lbs
W5H	11.0 lbs	N/A lbs
W61/W6M	5.2 lbs	4.2 lbs

Maximum Working Pressure at 100ºF:

	Bolts	Grade 5	Grade 8	18/8SS	316SS
Metallic Lower	W51	2,500 psi	2,500 psi	1,500 psi	1,500 psi
	W5K	5,000 psi	5,000 psi	3,000 psi	2,500 psi
	W5H	-	10,000 psi	-	-
	W61	1,500 psi	1,500 psi	1,000 psi	750 psi
	W6M	2,500 psi	2,500 psi	2,000 psi	2,000 psi
Non-Metallic Lower		300 psi	300 psi	300 psi	300 psi

THREADED OFFLINE WELDED DIAPHRAGM SEALS

HOW TO ORDER: Choose options to build a part number. For example: W51622HSS-TGRTR-BH-PP

W51	6	2	2	H	S	S
SEAL TYPE	**FLUSH PORT**	**INSTRUMENT CONNECTION**	**PROCESS CONNECTION**	**DIAPHRAGM MATERIAL**	**LOWER HOUSING**	**UPPER HOUSING**
W51 = 2.2" Diaphragm **W5K** = 2.2" Diaphragm Heavy Duty **W5H** = 2.2" Diaphragm High Pressure **W61** = 2.9" Diaphragm **W6M** = 2.9" Diaphragm Heavy Duty	**5** = No Flush Port **6** = Single 1/4" NPT **7** = Dual 1/4" NPT **C** = Single 1/2" NPT* **D** = Dual 1/2" NPT* *Only Available with W51 and W61 Seal Types. Note: SS Plugs Included in Flush Ports.	**2** = 1/2" Female NPT **4** = 1/4" Female NPT **W** = Low-Volume Connection for Smart Transmitters (316 upper only)	**1** = 1" NPT Female **2** = 1/2" NPT Female **3** = 3/4" NPT Female **4** = 1/4" NPT Female **5** = 1.5" NPT Female (W6 ONLY) **M** = 1/2" NPT Male* **6** = 1.25" NPT Female **7** = 3/8" NPT Female **8** = 1/8" NPT Female **9** = 2" NPT Female (W6 ONLY) *Welded adapter, not available in all materials.	**S** = 316L **H** = Hast C-276 **U** = Tantalum **M** = Monel (A400) **D** = Alloy 20 **Y** = Inconel **G** = Hast B **N** = Nickel **J** = Titanium[1] **2** = Duplex 2205 [1]Snap-in diaphragm type, not welded to upper housing. Wetted	**S** = 316/316L **H** = Hast C-276 **M** = Monel (A400) **D** = Alloy 20 **G** = Hast B **F** = 304/304L **C** = Carbon Steel **J** = Titanium **2** = Duplex 2205 **N** = Nickel **T** = Teflon (PTFE) ⚠ **Z** = PVC ⚠ **W** = CPVC ⚠ **K** = Kynar ⚠ ⚠ Important: see choosing a lower housing note below. Wetted	**S** = 316SS **C** = Carbon Steel, Nickel Plated

-T	G	RTR	-BH	-PP
BOLTS/FASTENERS	**GASKET**	**INSTRUMENT MOUNT**	**SYSTEM FILL FLUID**	**OPTIONS**
-5 = Carbon Steel Grade 5, Zinc Plated **-8** = Carbon Steel Grade 8, Yellow Chromate **-T** = Stainless Steel 18/8 **-S** = Stainless Steel 316	**K** = Klinger C-4401 **T** = PTFE **G** = Grafoil **Z** = Kalrez Wetted	*Direct Mount* **DTD** = Direct Mount, Threaded **DWD** = Direct Mount, Welded **RTR** = 6" Cooling Tower **STW** = 3" Cooling Standoff *Remote Mount* **A??** = Armored Capillary, Threaded **B??** = Armored Capillary, Welded **P??** = PVC Coated Armor, Threaded **W??** = PVC Coated Armor, Welded Note: ?? = Length in feet (e.g. 05 = 5 feet) *Tree Mount* **TRE** = Goal Post, Low Pressure **TRX** = Goal Post, Heavy Duty **TRM** = Compact Tree Assembly *See Page 57 for Complete Mounting Guide* **YYY** = Dry Seal, No Instrument	*Common Fills* **-AS** = Silicone DC200 **-AG** = Glycerin USP **-BH** = Silicone DC704 **-C1** = Fomblin Y06 (inert) **-C2** = Halocarbon 6.3 *See 58 for Complete Fill Guide* **-XX** = No Fill Fluid	**-PP** = Pulse Plus™ (Pulsation Protection) **-OX** = Cleaned for Oxygen Service **-AU** = Gold-Plated Diaphragm **-TC** = Teflon-Coated Diaphragm **-TS** = SS Tag (1-10 Character) **-FW** = Fill Port Welded Closed **-MR** = Mill Test Report **-NC** = NACE Certification **-PM** = Positive Material Identification Certification *See Page 83 for Additional Options*

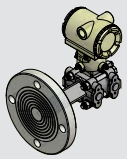

See Page 55 for Smart Transmitter Attachment Codes

⚠ **Important Note on Choosing a Lower Housing:** Reotemp recommends the use of metallic lower housings when process compatibility allows. Before specifying a non-metallic lower housing, users should be familiar with the material characteristics and risks of non-metallic materials including leaking, cracking, flowing and other issues that can affect durability and performance.

THREADED OFFLINE NON-METALLIC DIAPHRAGM SEALS

REOTEMP's Threaded Offline Non-Metallic Diaphragm Seals are designed with an upper and lower housing bolted together with a Teflon or Viton diaphragm bonded to the upper housing. This design allows for the lower housing to be removed for easy cleanout of the seal chamber while still maintaining the system fill. The Teflon and Viton diaphragms are ideal for protecting the pressure instrument from corrosive process fluid.

With Teflon Diaphragm

With Viton Diaphragm

FEATURES / BENEFITS

- Removable Lower Housing Design for Easy Cleanout
- Wide Variety of Plastic and Metallic Lower Housing Materials
- Highly Sensitive and Corrosion Resistant Diaphragm
- High Displacement Diaphragms Ideal for Mechanical Differential Pressure Gauges and Low Pressure Gauges

SPECIFICATIONS

Diaphragm	Teflon (Virgin PTFE) or Viton A.
Lower Housing	316SS, Hast C-276, Teflon, CPVC or others.
Gasket	Teflon or Viton
Upper Housing	316SS or Carbon Steel Nickel Plated

Process Temperature Limits

Lower Housing	Diaphragm	Max. Temp.
Metallic Lower	Teflon	450ºF
	Viton	300ºF
Non-Metallic Lower	Teflon	140ºF
	Viton	140°F

Ambient Temperature Limits Determined by the pressure instrument.

Minimum Recommended Span

	T5	T6	V5
2.5" & 3.5" Gauges	15 psi	60" H_2O	25" H_2O
4", 4.5", & 6" Gauges	15 psi	60" H_2O	25" H_2O
*Transmitter (Gauge Pressure)	15 psi	5 psi	30" H_2O
*Transmitter (Differential Pressure)	n/a	200" H_2Od	60" H_2Od
Differential Pressure Gauge (D40/42 ONLY)	n/a	300" H_2Od	100" H_2Od

*Warning: Non-metallic diaphragms are not recommended for critical transmitter applications.

Weight

	Metallic Lower	Non-Metallic Lower
T5	3.5 lbs	2.5 lbs
T6	5.2 lbs	4.2 lbs
V5	3.5 lbs	2.5 lbs

Note: All Weights are Approximate.

T51/V51

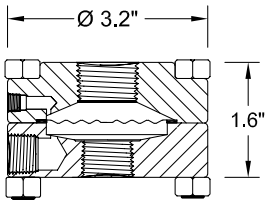

4-Bolt design

T61

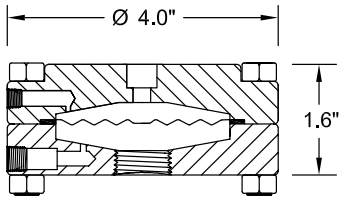

4-Bolt design

Note: All drawings depict a single 1/4" NPT Flush Port (optional). Drawing are not to scale. Contact REOTEMP customer service for more detailed drawings.

Maximum Working Pressures at 100ºF:

Bolts	Grade 5	Grade 8	18/8SS	316SS
Metallic Lower, T51, V51	2,500 psi	2,500 psi	1,500 psi	1,500 psi
Metallic Lower, T61	1,500 psi	1,500 psi	1,000 psi	750 psi
Non-Metallic Lower	300 psi	300 psi	300 psi	300 psi

THREADED OFFLINE NON-METALLIC DIAPHRAGM SEALS

HOW TO ORDER: Choose options to build a part number. For example: T51622TSS-TTDTD-AS-PP

T51	6	2	2	T	S	S
SEAL TYPE	**FLUSH PORT**	**INSTRUMENT CONNECTION**	**PROCESS CONNECTION**	**DIAPHRAGM MATERIAL**	**LOWER HOUSING**	**UPPER HOUSING**
T51 = 2.2" Teflon Diaphragm **T61** = 2.9" Teflon Diaphragm **V51** = 2.2" Viton Diaphragm	**5** = No Flush Port **6** = Single 1/4" NPT **7** = Dual 1/4" NPT **C** = Single 1/2" NPT **D** = Dual 1/2" NPT	**2** = 1/2" Female NPT **4** = 1/4" Female NPT	**1** = 1" NPT Female **2** = 1/2" NPT Female **3** = 3/4" NPT Female **4** = 1/4" NPT Female **5** = 1.5" NPT Female (T6 ONLY) **M** = 1/2" NPT Male* **6** = 1.25" NPT Female **7** = 3/8" NPT Female **8** = 1/8" NPT Female **9** = 2" NPT Female (T6 ONLY) *Welded adapter.	**T** = Teflon (Virgin PTFE) **V** = Viton A Wetted	**S** = 316/316L **H** = Hast C-276 **M** = Monel (A400) **D** = Alloy 20 **T** = Teflon (PTFE) ⚠ **Z** = PVC ⚠ **W** = CPVC ⚠ **K** = Kynar ⚠ ⚠ Important: see note on choosing a lower housing below. Wetted	**S** = 316SS **C** = Carbon Steel Nickel Plated

-T	T	DTD	-AS	-PP
BOLTS/FASTENERS	**GASKET**	**INSTRUMENT MOUNT**	**SYSTEM FILL FLUID**	**OPTIONS**
-5 = Carbon Steel Grade 5, Zinc Plated **-8** = Carbon Steel Grade 8, Yellow Chromate **-T** = Stainless Steel 18/8 **-S** = Stainless Steel 316	**T** = Teflon **V** = Viton Note: Gasket material matches diaphragm material. Wetted	*Direct Mount* **DTD** = Direct Mount, Threaded **DWD** = Direct Mount, Welded *Remote Mount* **A??** = Armored Capillary, Threaded **B??** = Armored Capillary, Welded **P??** = PVC Coated Armor, Threaded **W??** = PVC Coated Armor, Welded Note: ?? = Length in feet (e.g. 05 = 5 feet) *Tree Mount* **TRE** = Goal Post, Low Pressure **TRX** = Goal Post, Heavy Duty **TRM** = Compact Tree Assembly *See Page 57 for Complete Mounting Guide* **YYY** = Dry Seal, No Instrument	*Common Fills* **-AS** = Silicone DC200 **-AG** = Glycerin USP **-BH** = Silicone DC704 **-C1** = Fomblin Y06 (inert) **-C2** = Halocarbon 6.3 *See 58 for Complete Fill Guide* **-XX** = No Fill Fluid	**-PP** = Pulse Plus™ (Pulsation Protection) **-FW** = Fill Port Welded Closed **-TS** = SS Tag (1-10 Character) *See Page 83 for Additional Options*

⚠ **Important Note on Choosing a Lower Housing:** Reotemp recommends the use of metallic lower housings when process compatibility allows. Before specifying a non-metallic lower housing, users should be familiar with the material characteristics and risks of non-metallic materials including leaking, cracking, flowing and other issues that can affect durability and performance.

FLANGED OFFLINE WELDED DIAPHRAGM SEALS

REOTEMP's Flanged Offline Welded Diaphragm Seals are designed with an upper and lower housing, bolted together with a diaphragm welded to the upper housing. This removable design allows for easy cleanout of the seal chamber, while maintaining the system fill. The flanged offline diaphragm seal can be adapted to fit almost any pressure instrument and process application.

Stud Mount Style

Lower Ring Style

FEATURES / BENEFITS

- Welded Diaphragm for Maximum Durability
- Wide Variety of Diaphragm and Material Options
- Continuous-duty Disc Protects from Process Fluid Leaking in the Event of a System Breach
- Easy Cleanout of Diaphragm Cavity without Compromising Filled System

SPECIFICATIONS

Diaphragm	316SS, Hast C-276, Tantalum, Monel or others
Lower Housing	316SS, Hast C-276, Monel, CPVC or others
Gasket	PTFE, Grafoil, Klinger, or Kalrez
Upper Housing	316SS or Carbon Steel Nickel Plated

Process Temperature Limits

		Housing Type 2	Housing Type 3
Metallic Lower	PTFE Gasket	-110/400ºF	
	Klinger Gasket	-110/500ºF	
	Grafoil Gasket	-40/750ºF	
Non-Metallic Lower		N/A	140ºF

Ambient Temperature Limits Determined by the pressure instrument.

Minimum Recommended Span

	W5	W6
2.5" & 3.5" Gauges	15 psi	200" H_2O
4", 4.5", & 6" Gauges	30 psi	200" H_2O
Transmitter (Gauge Pressure)	150" H_2O	60" H_2O
Transmitter (Differential Pressure)	300" H_2Od	60" H_2Od
Differential Pressure Gauge (D40/42 Only)	N/A	N/A

Maximum Working Pressure Determined by flange.

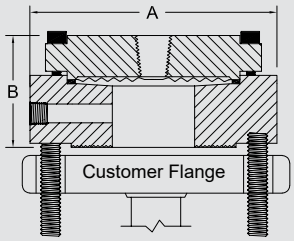

W52/W62
Stud Mount Style

Note: stud bolts provided as a convenience. Reotemp recommends customer provide their own bolts and fasteners.

Diaphragm Size	Flange (ANSI)		A (in)	B (in)
W52	1/2"	150#	3.3	1.7
		300#	3.5	1.7
	3/4"	150#	3.5	1.7
W62	1/2"	150#	4.0	1.7
		300#	4.0	1.7
	3/4"	150#	4.0	1.7
		300#	4.0	1.8
	1"	150#	4.0	1.7
		300#	4.8	1.8

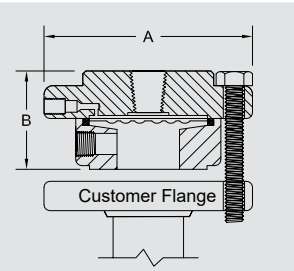

W53/W63
Lower Ring Style

W53	3/4"	300#	4.8	1.7
	1"	150#	4.3	1.7
		300#	4.8	1.7
	1.5"	150#	5.0	1.7
		300#	6.0	1.7
W63	1.5"	150#	5.0	1.7
		300#	6.0	1.7
	2"	150#	6.0	1.7
		300#	6.5	1.7

Note: All drawings depict a single 1/4" NPT Flush Port (optional). Drawing are not to scale. Contact REOTEMP customer service for more detailed drawings.

FLANGED OFFLINE WELDED DIAPHRAGM SEALS

HOW TO ORDER: Choose options to build a part number. For example: W5262RT1SSS-KDTD-AS-PP

W5	2	6	2	R	T	1	S
SEAL TYPE	HOUSING	FLUSH PORT	INSTRUMENT CONNECTION	SEALING FACE	PIPE SIZE	FLANGE RATING	DIAPHRAGM MATERIAL
W5 = 2.2" Diaphragm **W6** = 2.9" Diaphragm	**2** = Stud Mount Style **3** = Lower Ring Style	**5** = No Flush Port **6** = Single 1/4" NPT **7** = Dual 1/4" NPT **C** = Single 1/2" NPT[1] **D** = Dual 1/2" NPT[1] [1]Not available with type 2 housing.	**2** = 1/2" Female NPT **4** = 1/4" Female NPT **W** = Low-Volume Connection for Smart Transmitters	**R** = Raised Face **J** = Ring Type Joint **F** = Flat Face	**0** = 1/2" ANSI **T** = 3/4" ANSI **1** = 1" ANSI **H** = 1 ½" ANSI **2** = 2" ANSI **3** = 3" ANSI	**1** = 150# **3** = 300# **6** = 600# **9** = 900/1500# **5** = 2500# **7** = 900#[2] **8** = 1500#[2] [2]For 3" pipe size and larger.	**S** = 316L **H** = Hast C-276 **U** = Tantalum **M** = Monel (A400)[†] **D** = Alloy 20 **Y** = Inconel **G** = Hast B **N** = Nickel **J** = Titanium[3] **2** = Duplex 2205 [3]Snap-in diaphragm type, not welded to upper housing. [†]Only available with carbon steel upper housing. Wetted

Housing Details

Pipe Size	Seal Type W5	Seal Type W6
1/2"	2	2
3/4"	150# 2	2
	300# 3	
1"	3	2
1 ½"	3	3
2"	3	3
3"	3	3

S	S	-K	DTD	-AS	-PP
LOWER HOUSING	UPPER HOUSING	GASKET	INSTRUMENT MOUNT	SYSTEM FILL FLUID	OPTIONS
S = 316L **H** = Hast C-276 **M** = Monel (A400) **D** = Alloy 20 **G** = Hast B **L** = Teflon Lined 316SS[5] **2** = Duplex 2205 **T** = Teflon (PTFE)[4]⚠ **K** = Kynar[4]⚠ **W** = CPVC[4]⚠ **Z** = PVC[4]⚠ [4]Not available on stud mount style housing. [5]Available for 1" flange and larger. Wetted	**S** = 316SS **C** = Carbon Steel Nickel Plated	**-K** = Klinger C-4401 **-T** = PTFE **-G** = Grafoil **-Z** = Kalrez Wetted	*Direct Mount* **DTD** = Direct Mount, Threaded **DWD** = Direct Mount, Welded **RTR** = 6" Cooling Tower **STW** = 3" Cooling Standoff *Remote Mount* **A??** = Armored Capillary, Threaded **B??** = Armored Capillary, Welded **P??** = PVC Coated Armor, Threaded **W??** = PVC Coated Armor, Welded Note: ?? = Length in feet (e.g. 05 = 5 feet). *Tree Mount* **TRE** = Goal Post, Low Pressure **TRX** = Goal Post, Heavy Duty **TRM** = Compact Tree Assembly *See Page 57 for Complete Mounting Guide* **YYY** = Dry Seal, No Instrument	*Common Fills* **-AS** = Silicone DC200 **-AG** = Glycerin USP **-BH** = Silicone DC704 **-C1** = Fomblin Y06 (inert) **-C2** = Halocarbon 6.3 *See 58 for Complete Fill Guide* **-XX** = No Fill Fluid	**-PP** = Pulse Plus™ (Pulsation Protection) **-OX** = Cleaned for Oxygen Service **-AU** = Gold-Plated Diaphragm **-TC** = Teflon-Coated Diaphragm **-TS** = SS Tag (1-10 Characters) **-FW** = Fill Port Welded Closed **-LU** = Tantalum Clad Lower Housing **-NC** = NACE Certification MRO-175 *See Page 83 for Additional Options*

⚠ **Important Note on Choosing a Lower Housing:** Reotemp recommends the use of metallic lower housings when process compatibility allows. Before specifying a non-metallic lower housing, users should be familiar with the material characteristics and risks of non-metallic materials including leaking, cracking, flowing and other issues that can affect durability and performance.

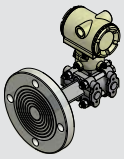

See Page 55 for Smart Transmitter Attachment Codes

FLANGED OFFLINE NON-METALLIC DIAPHRAGM SEALS

REOTEMP's Flanged Offline Non-Metallic Diaphragm Seals are designed with an upper and lower housing bolted together with a Teflon or Viton diaphragm bonded to the upper housing. This design allows for the lower housing to be removed for easy cleanout of the seal chamber while still maintaining the system fill. The Teflon and Viton diaphragm are ideal for protecting the pressure instrument from corrosive process fluid.

Stud Mount Style

Lower Ring Style

FEATURES / BENEFITS

- Removable Lower Housing Design for Easy Cleanout
- Wide Variety of Plastic and Metallic Lower Housing Materials
- Highly Sensitive and Corrosion Resistant Diaphragm
- High Displacement Diaphragms Ideal for Mechanical Differential Pressure Gauges and Low Pressure Gauges

SPECIFICATIONS

Diaphragm	Teflon(Virgin PTFE) or Viton A
Lower Housing	316SS, Hast C-276, Monel, CPVC, or others.
Gasket	Teflon or Viton
Upper Housing	316SS or Carbon Steel Nickel Plated

Process Temperature Limits

Lower Housing	Diaphragm	Max. Temp.
Metallic Lower	Teflon	450ºF
	Viton	300ºF
Non-Metallic Lower	Teflon	140ºF
	Viton	140°F

Ambient Temperature Limits Determined by the pressure instrument.

Minimum Recommended Span

	T5	T6	V5
2.5" & 3.5" Gauges	15 psi	60" H_2O	15" H_2O
4", 4.5", & 6" Gauges	15 psi	60" H_2O	15" H_2O
*Transmitter (Gauge Pressure)	15 psi	5 psi	30" H_2O
*Transmitter (Differential Pressure)	n/a	200" H_2Od	60" H_2Od
Differential Pressure Gauge	n/a	300" H_2Od	100" H_2Od

*Warning: Non-metallic diaphragms are not recommended for critical transmitter applications.

Maximum Working Pressure Determined by flange.

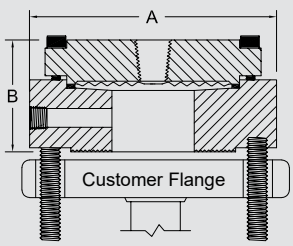

T52/V52
Stud Mount Style

Diap.	Size	Flange (ANSI)		A (in)	B (in)
Viton	V52	1/2"	150#	3.5	1.8
			300#	3.5	1.8
		3/4"	150#	3.5	1.8
Teflon	T52	1/2"	150#	3.3	1.7
			300#	3.5	1.7
		3/4"	150#	3.5	1.7
	T62	1/2"	150#	4.0	1.8
			300#	4.0	1.8
		3/4" & 1"	150#	4.0	1.8
			300#	4.8	1.9

Note: stud bolts provided as a convenience. Reotemp recommends customer provide their own bolts and fasteners.

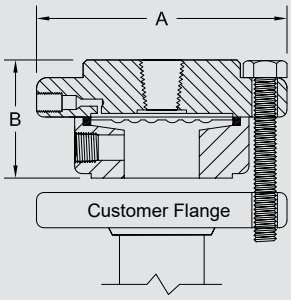

T53/T63/V53
Lower Ring Style

Viton	V53	3/4"	300#	4.8	1.9
		1"	150#	4.0	1.8
			300#	4.8	1.9
		1.5"	150#	5.0	1.8
			300#	6.0	1.8
Teflon	T53	3/4"	300#	4.8	1.7
		1"	150#	4.3	1.7
			300#	4.8	1.7
		1.5"	150#	5.0	1.7
			300#	6.0	1.7
	T63	1.5"	150#	5.0	1.8
			300#	6.0	1.8

Note: All drawings depict a single 1/4" NPT Flush Port (optional). Drawing are not to scale. Contact REOTEMP customer service for more detailed drawings.

FLANGED OFFLINE NON-METALLIC DIAPHRAGM SEALS

HOW TO ORDER: Choose options to build a part number. For example: T5352R11TSS-TDTD-C2-PP

T5	3	5	2	R	1	1	T
SEAL TYPE	HOUSING	FLUSH PORT	INSTRUMENT CONNECTION	SEALING FACE	PIPE SIZE	FLANGE RATING	DIAPHRAGM MATERIAL
T5 = 2.2" Teflon Diaphragm **T6** = 2.9" Teflon Diaphragm **V5** = 2.2" Viton Diaphragm	**2** = Stud Mount Style **3** = Lower Ring Style	**5** = No Flush Port **6** = Single 1/4" NPT **7** = Dual 1/4" NPT **C** = Single 1/2" NPT[2] **D** = Dual 1/2" NPT[2] [2]Not available with type 2 housing.	**2** = 1/2" Female NPT **4** = 1/4" Female NPT	**R** = Raised Face **J** = Ring Type Joint **F** = Flat Face	**O** = 1/2" ANSI **T** = 3/4" ANSI **1** = 1" ANSI **H** = 1 ½" ANSI **2** = 2" ANSI **3** = 3" ANSI	**1** = 150# **3** = 300# **6** = 600# **9** = 900/1500# **5** = 2500#	**T** = Teflon (Virgin PTFE) **V** = Viton A Wetted

Housing Details

Pipe Size	Seal Type: T5/ V5	Seal Type: T6
1/2"	2	2
3/4"	150# 2 300# 3	2
1"	3	2
1 ½"	3	3
2"	3	3
3"	3	3

S	S	-T	DTD	-C2	-PP
LOWER HOUSING	UPPER HOUSING	GASKET	INSTRUMENT MOUNT	SYSTEM FILL FLUID	OPTIONS
S = 316L **H** = Hast C-276 **M** = Monel (A400) **D** = Alloy 20 **G** = Hast B **L** = Teflon Lined 316SS[1] **T** = Teflon (PTFE)[†] ⚠ **K** = Kynar[†] ⚠ **W** = CPVC[†] ⚠ **Z** = PVC[†] ⚠ [†]Not available on stud mount style housing. [1]Available for 1" flange and larger. Wetted	**S** = 316SS **C** = Carbon Steel Nickel Plated	**T** = Teflon **V** = Viton Note: gasket material matches diaphragm material. Wetted	*Direct Mount* **DTD** = Direct Mount, Threaded **DWD** = Direct Mount, Welded **RTR** = 6" Cooling Tower **STW** = 3" Cooling Standoff *Remote Mount* **A??** = Armored Capillary, Threaded **B??** = Armored Capillary, Welded **P??** = PVC Coated Armor, Threaded **W??** = PVC Coated Armor, Welded Note: ?? = Length in feet (e.g. 05 = 5 feet). *Tree Mount* **TRE** = Goal Post, Low Pressure **TRX** = Goal Post, Heavy Duty **TRM** = Compact Tree Assembly *See Page 57 for Complete Mounting Guide* **YYY** = Dry Seal, No Instrument	*Common Fills* **-AS** = Silicone DC200 **-AG** = Glycerin USP **-BH** = Silicone DC704 **-C1** = Fomblin Y06 (inert) **-C2** = Halocarbon 6.3 *See 58 for Complete Fill Guide* **-XX** = No Fill Fluid	**-PP** = Pulse Plus™ (Pulsation Protection) **-TS** = SS Tag (1-10 Characters) **-FW** = Fill Port Welded Closed *See Page 83 for Additional Options*

⚠ **Important Note on Choosing a Lower Housing:** Reotemp recommends the use of metallic lower housings when process compatibility allows. Before specifying a non-metallic lower housing, users should be familiar with the material characteristics and risks of non-metallic materials including leaking, cracking, flowing and other issues that can affect durability and performance.

Viton Diaphragm, Lower Ring Style

HIGH ACCURACY THREADED DIAPHRAGM SEALS

REOTEMP's High Accuracy and High Displacement Threaded Diaphragm Seals are ideal for applications where high sensitivity or large fluid displacement is key to proper instrument performance. Designed with a diaphragm welded to the upper housing, the lower housing is detachable from the seal body allowing for easy cleanout of the process cavity without losing system fill. The High Accuracy Threaded Diaphragm Seal is most commonly mounted to Smart Transmitters (Gauge, Differential, and Absolute pressure), low pressure capsule gauges, mechanical DP gauges, and mechanical pressure switches.

W71

FEATURES / BENEFITS

- Extra Large 4.1" Diaphragm for Maximum Sensitivity
- Wide Variety of Wetted Material Options
- 100% Helium Leak Tested Diaphragm Welds
- Easy Cleanout Design with Multiple Flush Port Options

SPECIFICATIONS

Diaphragm	316SS, Hast C-276, Tantalum, Monel, or Others
Lower Housing	316SS, Hast C-276, Monel, CPVC, or Others
Gasket	PTFE, Grafoil, Klinger or Kalrez
Upper Housing	316SS

Process Temperature Limits

	W7
PTFE Gasket	-110/400ºF
Klinger Gasket	-110/500ºF
Grafoil Gasket	-40/750ºF

Ambient Temperature Limits: Determined by the pressure instrument.

Minimum Recommended Span

2.5" & 3.5" Gauges	30" H_2O
4", 4.5", & 6" Gauges	30" H_2O
Transmitter (Gauge Pressure)	15" H_2O
Transmitter (Differential Pressure)	15" H_2Od
Differential Pressure Gauge (D40/42 Only)	100" H_2Od

Weight: 12 lbs. Note: weight is approximate.

Maximum Working Pressure at 100ºF:

Bolts	Grade 8	316SS
W71	1,500 psi	750 psi
W7N	4,000 psi	2000 psi

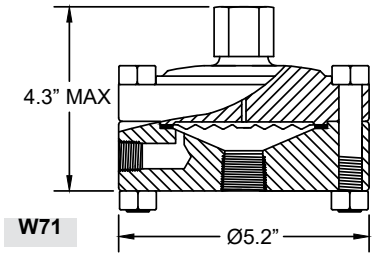

Standard Pressure
8-Bolt design

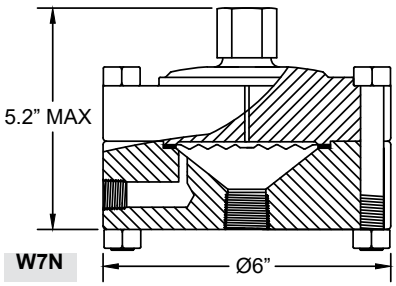

Heavy Duty
8-Bolt design

Note: All drawings depict a single 1/4" NPT Flush Port (optional). Drawing are not to scale. Contact REOTEMP customer service for more detailed drawings.

HIGH ACCURACY THREADED DIAPHRAGM SEALS

HOW TO ORDER: Choose options to build a part number. For example: W71622UHS-SGRTR-C1-PP

W71	6	2	2	U	H	S
SEAL TYPE	**FLUSH PORT**	**INSTRUMENT CONNECTION**	**PROCESS CONNECTION**	**DIAPHRAGM MATERIAL**	**LOWER HOUSING**	**UPPER HOUSING**
W71 = 4.1" Diaphragm **W7N** = 4.1" Diaphragm Heavy Duty	**5** = No Flush Port **6** = Single 1/4" NPT **7** = Dual 1/4" NPT **C** = Single 1/2" NPT‡ **D** = Dual 1/2" NPT‡ Note: SS plugs are furnished with flush ports. ‡ Flush ports may increase height.	**2** = 1/2" Female NPT **4** = 1/4" Female NPT **W** = Low-Volume Connection for Smart Transmitters	**1** = 1" NPT Female **2** = 1/2" NPT Female **3** = 3/4" NPT Female **4** = 1/4" NPT Female **5** = 1.5" NPT Female **M** = 1/2" NPT Male* **6** = 1.25" NPT Female **7** = 3/8" NPT Female **8** = 1/8" NPT Female **9** = 2" NPT Female *Welded adapter, not available in all materials.	**S** = 316L **H** = Hast C-276 **U** = Tantalum **M** = Monel (A400)[2] **D** = Alloy 20 **N** = Nickel **J** = Titanium[1] **2** = Duplex 2205 [1]Only available with titanium upper housing. Wetted	**S** = 316/316L **H** = Hast C-276 **M** = Monel (A400) **D** = Alloy 20 **G** = Hast B **F** = 304/304L **N** = Nickel **J** = Titanium **2** = Duplex 2205 Wetted	**S** = 316SS

-S	G	RTR	-C1	-PP
BOLTS/FASTENERS	**GASKET**	**INSTRUMENT MOUNT**	**SYSTEM FILL FLUID**	**OPTIONS**
-8 = Carbon Steel Grade 8, Yellow Chromate **-S** = Stainless Steel 316	**K** = Klinger C-4401 **T** = PTFE **G** = Grafoil **Z** = Kalrez Wetted	*Direct Mount* **DTD** = Direct Mount, Threaded **DWD** = Direct Mount, Welded **RTR** = 6" Cooling Tower **STW** = 3" Cooling Standoff *Remote Mount* **A??** = Armored Capillary, Threaded **B??** = Armored Capillary, Welded **P??** = PVC Coated Armor, Threaded **W??** = PVC Coated Armor, Welded Note: ?? = Length in feet (e.g. 05 = 5 feet) *Tree Mount* **TRE** = Goal Post, Low Pressure **TRX** = Goal Post, Heavy Duty **TRM** = Compact Tree Assembly *See Page 57 for Complete Mounting Guide* **YYY** = Dry Seal, No Instrument	*Common Fills* **-AS** = Silicone DC200 **-AG** = Glycerin USP **-BH** = Silicone DC704 **-C1** = Fomblin Y06 (inert) **-C2** = Halocarbon 6.3 *See 58 for Complete Fill Guide* **-XX** = No Fill Fluid	**-PP** = Pulse Plus™ (Pulsation Protection) **-OX** = Cleaned for Oxygen Service **-AU** = Gold-Plated Diaphragm **-TC** = Teflon-Coated Diaphragm **-TS** = SS Tag (1-10 Character) **-FW** = Fill Port Welded Closed **-MR** = Mill Test Report **-NC** = NACE Certification **-PM** = Positive Material Identification Certification *See Page 83 for Additional Options* 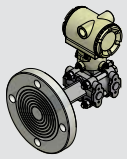 **See Page 55 for Smart Transmitter Attachment Codes**

DIAPHRAGM SEALS

HIGH ACCURACY FLANGED DIAPHRAGM SEALS

REOTEMP's High Accuracy Flanged Diaphragm Seals are ideal for applications where high sensitivity or large fluid displacement is key to proper instrument performance. Designed with a diaphragm welded to the upper housing, the lower housing is detachable from the seal body allowing for easy cleanout of the process cavity without losing system fill. The High Accuracy Flanged Diaphragm Seal is most commonly mounted to Smart Transmitters (Gauge, Differential, and Absolute pressure), low pressure capsule gauges, mechanical DP gauges, and mechanical pressure switches.

Stud Mount Style

Lower Ring Style

FEATURES / BENEFITS

- Extra Large 4.1" Diaphragm for Maximum Sensitivity
- Wide Variety of Wetted Material Options
- 100% Helium Leak Tested Diaphragm Welds
- Easy Cleanout Design with Multiple Flush Port Options

SPECIFICATIONS

Diaphragm	316SS, Hast C-276, Tantalum, Monel, or Others
Lower Housing	316L, Hast C-276, Monel, or Others
Gasket	PTFE, Grafoil, Klinger, or Kalrez
Upper Housing	316SS
Process Temperature Limits	PTFE Gasket: -110/400°F Klinger Gasket: -110/500°F Grafoil Gasket: -40/750°F
Ambient Temperature Limits	Determined by the pressure instrument.
Minimum Recommended Span	
Maximum Working Pressure	Determined by flange.

	W7
2.5” & 3.5” Gauges	30” H_2O
4”, 4.5”, & 6” Gauges	30” H_2O
Transmitter (Gauge Pressure)	15” H_2O
Transmitter (Differential Pressure)	15” H_2Od
Differential Pressure Gauge (D40/42 Only)	100” H_2Od

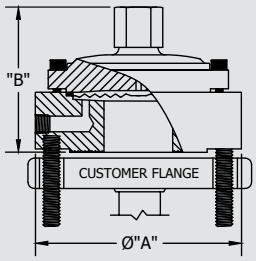

W72
Stud Mount Style

Note: stud bolts provided as a convenience. Reotemp recommends customer provide their own bolts and fasteners.

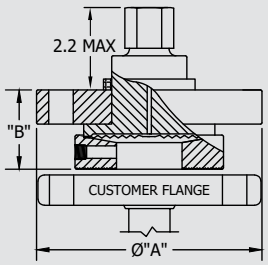

W73
Lower Ring Style

	Diaphragm Size	Flange (ANSI)		A (in)	B (in)
W72		1/2” & 3/4”	150#	5.3	4.0
			300#	5.3	4.0
		1”	150#	5.3	4.0
			300#	5.3	4.0
		1.5”	150#	5.3	4.0
			300#	5.3	4.0
		2"	150#	6.0	4.0
W73		2"	300#	6.5	2.1
		3"	150#	7.5	1.9
			300#	8.3	2.4

Note: All drawings depict a single 1/4” NPT Flush Port (optional). Drawing are not to scale. Contact REOTEMP customer service for more detailed drawings.

HIGH ACCURACY FLANGED DIAPHRAGM SEALS

HOW TO ORDER: Choose options to build a part number. For example: W7262R21SSS-KDTD-AS-OX

W7	2	6	2	R	2	1	S
SEAL TYPE	HOUSING	FLUSH PORT	INSTRUMENT CONNECTION	SEALING FACE	PIPE SIZE	FLANGE RATING	DIAPHRAGM MATERIAL
W7 = 4.1" Diaphragm	**2** = Stud Mount Style **3** = Lower Ring Style	**5** = No Flush Port **6** = Single 1/4" NPT **7** = Dual 1/4" NPT **C** = Single 1/2" NPT[1] **D** = Dual 1/2" NPT[1] [1]1/2" NPT Flush may increase "B" dimension. Note: Stainless steel plugs are furnished with flush ports.	**2** = 1/2" Female NPT **4** = 1/4" Female NPT **W** = Low-Volume Connection for Smart Transmitters	**R** = Raised Face **J** = Ring Type Joint **F** = Flat Face	**0** = 1/2" ANSI **T** = 3/4" ANSI **1** = 1" ANSI **H** = 1 ½" ANSI **2** = 2" ANSI **3** = 3" ANSI **4** = 4" ANSI	**1** = 150# **3** = 300# **6** = 600# **9** = 900/1500# **5** = 2500# **7** = 900#[2] **8** = 1500#[2] [2]For 3" pipe size and larger.	**S** = 316L **H** = Hast C-276 **U** = Tantalum **M** = Monel (A400) **D** = Alloy 20 **Y** = Inconel **N** = Nickel **J** = Titanium[3] **2** = Duplex 2205 [3]Only available with Titanium upper housing. Wetted

Housing Details

Pipe Size	Seal Type W7
1/2"	2
3/4"	2
1"	2
1 ½"	2
2"	150# 2
	300# 3
3"	3

S	S	-K	DTD	-AS	-OX
LOWER HOUSING	UPPER HOUSING	GASKET	INSTRUMENT MOUNT	SYSTEM FILL FLUID	OPTIONS
S = 316L **H** = Hast C-276 **M** = Monel (A400) **D** = Alloy 20 **G** = Hast B **2** = Duplex 2205 **J** = Titanium **F** = 304L **J** = Nickel Wetted	**S** = 316SS	**-K** = Klinger C-4401 **-T** = PTFE **-G** = Grafoil **-Z** = Kalrez Wetted	*Direct Mount* **DTD** = Direct Mount, Threaded **DWD** = Direct Mount, Welded **RTR** = 6" Cooling Tower **STW** = 3" Cooling Standoff *Remote Mount* **A??** = Armored Capillary, Threaded **B??** = Armored Capillary, Welded **P??** = PVC Coated Armor, Threaded **W??** = PVC Coated Armor, Welded Note: ?? = Length in feet (e.g. 05 = 5 feet). *Tree Mount* **TRE** = Goal Post, Low Pressure **TRX** = Goal Post, Heavy Duty **TRM** = Compact Tree Assembly *See Page 57 for Complete Mounting Guide* **YYY** = Dry Seal, No Instrument	*Common Fills* **-AS** = Silicone DC200 **-AG** = Glycerin USP **-BH** = Silicone DC704 **-C1** = Fomblin Y06 (inert) **-C2** = Halocarbon 6.3 *See 58 for Complete Fill Guide* **-XX** = No Fill Fluid	**-PP** = Pulse Plus™ (Pulsation Protection) **-OX** = Cleaned for Oxygen Service **-AU** = Gold-Plated Diaphragm **-TC** = Teflon-Coated Diaphragm **-TS** = SS Tag (1-10 Characters) **-FW** = Fill Port Welded Closed **-NC** = NACE Certification MRO-175 *See Page 83 for Additional Options*

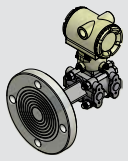

See Page 55 for Smart Transmitter Attachment Codes

DIAPHRAGM SEALS

FLANGED FLUSH FACE DIAPHRAGM SEALS

REOTEMP's Flanged Flush-Face Diaphragm Seals are useful in applications where a continuous flow of process across the diaphragm is required to prevent solids buildup and a one-piece, all-welded construction is desired.

W9FF
Wetted Flange

W9FR
Integral Face Non-wetted Flange

FEATURES / BENEFITS

- One-piece Seal Design Bolts Directly to Process Flange
- Center Instrument Exit
- Commonly Supplied with Flush/Calibration Ring
- Ideal for Gauge or Differential Pressure Transmitters

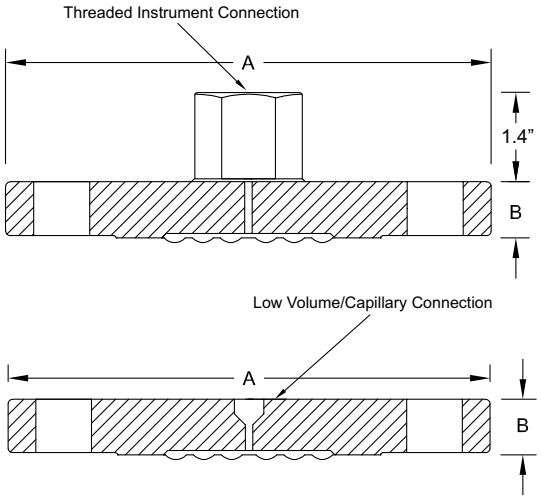

SPECIFICATIONS

Wetted Materials	Flange: 316SS, 304SS, Monel, Alloy 20, or Hast C-276. Diaphragm: 316SS, Hast C-276, Tantalum, Monel, or others
Process Temperature Limits	-110° to 750°F
Ambient Temperature Limits	Determined by the pressure instrument.

Minimum Recommended Span

	Diaphragm Size			
	1.8"	2.2"	3.5"	4.1"
2.5" & 3.5" Gauges	30 psi	15 psi	10 psi	30" H_2O
4", 4.5", & 6" Gauges	N/A	60 psi	10 psi	30" H_2O
Transmitter (Gauge Pressure)	10 psi	100" H_2O	30" H_2O	15" H_2O
Transmitter (Differential Pressure)	N/A	150" H_2Od	30" H_2Od	15" H_2Od
Differential Pressure Gauge	N/A	N/A	N/A	100" H_2Od

Available Diaphragm Sizes

	Diaphragm Size			
	1.8"	2.2"	3.5"	4.1"
1-1/2" Flange	STD	N/A	N/A	N/A
2" Flange	-D5	STD	N/A	N/A
3" Flange	-D5	-D6	STD	N/A
4" Flange	-D5	-D6	STD	-D9

Optional Diaphragm sizes are only available in W9FF, standard diaphragm sizes are the same for W9FF and W9FR.

Weights and Dimensions:

	Flange Rating	A	B	# of Bolts	Weight (Lbs.)
1 ½"	150#	5"	.69"	4	4
2"		6"	.75"	4	5
3"		7.5"	.94"	4	9
4"		9"	.94"	8	17
1 ½"	300#	6.13"	.81"	4	6
2"		6.5"	.88"	8	8
3"		8.25"	1.13"	8	16

NOTE: Weights and dimensions are for raised face flanges only. Other flange sizes and sealing face info can be found in ANSI B16.5 standards.

Maximum Working Pressures at 100ºF:
Determined by ANSI B16.5 flange ratings.

FLANGED FLUSH FACE DIAPHRAGM SEALS

HOW TO ORDER: Choose options to build a part number. For example: W9FFWR21S-W10-AS-TS // DXFR241S

W9FF	W	R	2	1	S
SEAL TYPE	**INSTRUMENT CONNECTION**	**SEALING FACE**	**PIPE SIZE**	**PRESSURE RATING**	**DIAPHRAGM/ FLANGE MATERIAL**
Selections for W9FF > **W9FF** = Flanged Flush Face (Wetted Flange)	**2** = 1/2" Female NPT **4** = 1/4" Female NPT **W** = Low-Volume Connection for Smart Transmitters	**R** = Raised-Face **J** = Ring-Type Joint **F** = Flat Face	**H** = 1-½" ANSI **2** = 2" ANSI **3** = 3" ANSI **4** = 4" ANSI **6** = 6" ANSI	**1** = 150# **3** = 300# **6** = 600# **9** = 900/1500# **7** = 900#[1] **8** = 1500#[1] [1]For 3" pipe size or larger.	**S** = 316L/316L **M** = Monel/Monel* **F** = 304/304L* **H** = Hast C-276/Hast C-276* *Non-standard configuration.
Selections for W9FR > **W9FR** = Flanged Flush Face, Integral Face (Non-Wetted Flange)	**2** = 1/2" Female NPT **4** = 1/4" Female NPT **W** = Low-Volume Connection for Smart Transmitters	**R** = Raised-Face **J** = Ring-Type Joint	**H** = 1-½" ANSI **2** = 2" ANSI **3** = 3" ANSI **4** = 4" ANSI	**1** = 150# **3** = 300# **6** = 600# **9** = 900/1500# **7** = 900#[1] **8** = 1500#[1] [1]For 3" pipe size or larger.	*Wetted Insert & Diaphragm* **H** = Hast C-276 **U** = Tantalum **2** = Duplex 2205 **J** = Titanium **I** = Inconel **Z** = Zirconium **M** = Monel A400 Note: Non-wetted 316SS flange. Wetted

Diaphragm Foil

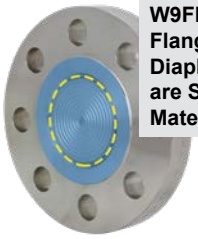

W9FF 1-Piece Flange & Diaphragm are Same Material

W9FR 2-Piece 316 Flange & Wetted Insert, Material as Selected

Diaphragm Surface

Wetted Surface

DIAPHRAGM SEALS

-W10	-AS	-TS	// DXFR241S
INSTRUMENT MOUNT	**SYSTEM FILL FLUID**	**OPTIONS**	**FLUSH/CALIBRATION RINGS (OPTIONAL)**
Selections for Both W9FF & W9FR > **-DTD** = Direct Mount, Threaded **-DWD** = Direct Mount, Welded **-RTR** = 6" Cooling Tower **-STW** = 3" Cooling Tower **-A??** = Armored Capillary, Threaded **-B??** = Armored Capillary, Welded **-P??** = PVC Coated Armor, Threaded **-W??** = PVC Coated Armor, Welded Note: ?? = Length in Feet (e.g. 05 = 5 feet) *See Page 57 for Complete Mounting Guide*	*Common Fills* **-AS** = Silicone DC200 **-AG** = Glycerin USP **-BH** = Silicone DC704 **-C1** = Fomblin Y06 **-C2** = Halocarbon 6.3 *See 58 for Complete Fill Guide*	**-OX** = Cleaned for Oxygen Service **-AU** = Gold-Plated Diaphragm (20 Microns) **-NC** = NACE Certification MRO-175 **-TC** = Teflon-Coated Diaphragm **-TS** = SS Tag (9 Character Max.) **-D9** = 4.1" Diaphragm (W9FF 4" Only) **-D6** = 2.2" Diaphragm (Optional on W9FF 3" and 4")	**DXFR241S** = 2" Pipe, Single 1/4" Port, 316SS **DXFR242S** = 2" Pipe, Dual 1/4" Port, 316SS **DXFR221S** = 2" Pipe, Single 1/2" Port, 316SS **DXFR222S** = 2" Pipe, Dual 1/2" Port, 316SS **DXFR341S** = 3" Pipe, Single 1/4" Port, 316SS **DXFR342S** = 3" Pipe, Dual 1/4" Port, 316SS **DXFR321S** = 3" Pipe, Single 1/2" Port, 316SS **DXFR322S** = 3" Pipe, Dual 1/2" Port, 316SS *See Page 81 for Complete Offering* Wetted
-YYY = Dry Seal, No Instrument	**-XX** = No Fill Fluid		

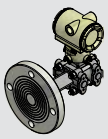

See Page 55 for Smart Transmitter Attachment Codes

EXTENDED DIAPHRAGM SEAL

W9XT

The Extended Diaphragm Seal is ideal for highly viscous and dry powder applications. Its unique design eliminates dead space in piping. It is often used for flush mounting in thick-walled vessels and is available in standard and custom lengths.

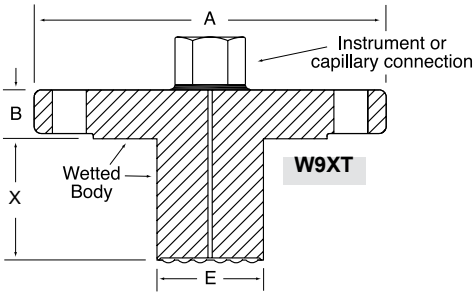

SPECIFICATIONS

Wetted Materials	316L or Hast C-276
Process Temperature Limits	-110°F to 750°F
Ambient Temperature Limits	Determined by the pressure instrument.

Minimum Recommended Span

	2”	3”	4”
Transmitter (Gauge Pressure)	200 ”H_2O	100 ”H_2O	30 ”H_2O
Transmitter (Differential Pressure)	200 ”H_2Od	150 ”H_2Od	30 ”H_2Od

Dimensions:

	Flange Rating	A	B	E*
1.5”	150#	5”	0.70”	1.40”
2”	150#	6"	0.75"	1.90"
	300#	6.5"	0.88"	1.90"
3”	150#	7.5"	0.94"	2.80"
	300#	8.25"	1.13"	2.80"
4”	150#	9"	0.94"	3.70"
	300#	10"	1.19"	3.70"
6"	150#	11"	0.94"	5.7"

*Extension diameter meant to fit SCH80 Nozzle. Custom extension diameters available.

NOTE: Dimensions are for raised face flanges only. Other flange sizes and sealing face info can be found in ANSI B16.5 standards.

HOW TO ORDER: Choose options to build a part number. For example: W9XTWR31SSS020-W10-AS-DG

W9XT	W	R	3	1	S	S
MODEL	**INSTRUMENT CONNECTION**	**SEALING FACE**	**PIPE SIZE**	**FLANGE RATING**	**DIAPHRAGM MATERIAL**	**EXTENSION MATERIAL**
W9XT = Flanged Extended Diaphragm	**W** = Low-Volume Connection for Smart Transmitters **2** = 1/2” NPT Female **4** = 1/4” NPT Female	**R** = Raised Face **J** = Ring Type Joint	**H** = 1.5” Pipe **2** = 2” Pipe **3** = 3” Pipe **4** = 4” Pipe **6** = 6” Pipe	**1** = 150# ANSI **3** = 300# ANSI **6** = 600# ANSI	**S** = 316LSS **H** = Hastelloy C-276 Wetted	**S** = 316LSS **H** = Hastelloy C-276 Wetted

S	020	-W10	-AS	-DG
FLANGE/SEALING FACE MATERIAL	**EXTENSION LENGTH (X)**	**MOUNTING**	**FILL FLUID**	**OPTIONS**
S = 316LSS **H** = Hast. C-276 Wetted	**020** = 2” **040** = 4” **060** = 6” **???** = Enter Custom Length in Inches Note: ??? = Length in inches (e.g. 020 = 2 inches).	**-DWD** = Direct Mount, All Welded **-RTR** = 6” Cooling Tower, Welded **-B??** = SS Armored Capillary, Welded **-W??** = PVC Coated SS Armored Capillary, Welded Note: ?? = Length in feet (e.g. 05 = 5 feet) *See Page 57 for Complete Mounting Guide*	**-AS** = Silicone DC200 **-AG** = Glycerin USP **-BH** = Silicone DC704 **-C1** = Fomblin Y06 (inert) **-C2** = Halocarbon 6.3 *See Page 58 for Complete Fill Guide*	**-DG** = Degreased and Bagged **-AU** = Gold Plated Diaphragm (20 Microns Thick) **-TS** = SS Tag (1-10 Characters) *See Page 55 for Smart Transmitter Attachment Codes*

FLUSH PANCAKE (WAFER) DIAPHRAGM SEAL

W9FP

W9FP with Backing Flange

The Flush Pancake (Wafer) Diaphragm Seal is a flange type diaphragm seal with no bolt holes. It mounts between an open process flange and cover flange. Instruments are connected via side capillary connection and it is an ideal seal for transmitters or dP transmitters.

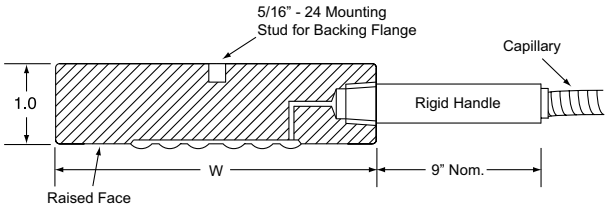

W9FP

Wafer Size	2"	3"	4"
W	3.6"	5.0"	6.2"

SPECIFICATIONS

Wetted Materials	316L or Hast C-276		
Process Temperature Limits	-110°F to 750°F		
Ambient Temperature Limits	Determined by the pressure instrument.		
Minimum Recommended Span		2"	3" & 4"
	Transmitter (Gauge Pressure)	100" H_2O	30" H_2O
	Transmitter (Differential Pressure)	150" H_2Od	30" H_2Od

HOW TO ORDER: Choose options to build a part number. For example: W9FPWR2SF1-W10-AS-DG // DXFR242S

W9FP	W	R	2	S	F	1
MODEL	**INSTRUMENT CONNECTION**	**SEALING FACE**	**PIPE SIZE**	**DIAPHRAGM/WETTED SURFACE MATERIAL**	**BACKING FLANGE MATERIAL**	**FLANGE RATING**
W9FP = Flanged Pancake	**W** = Low-Volume Connection for Smart Transmitters	**R** = Raised Face	**2** = 2" Pipe **3** = 3" Pipe **4** = 4" Pipe **6** = 6" Pipe	**S** = 316LSS ***H** = Hastelloy C-276 *Non-wetted body is 316L Wetted	**X** = No Backing Flange **S** = 316LSS **F** = 304SS **C** = Carbon Steel	**X** = No Backing Flange **1** = 150# **3** = 300# **6** = 600# **5** = 2500# **9** = 900#/1500# **7** = 900#[1] **8** = 1500#[1] [1]For 3" Pipe Size or Larger

-W10	-AS	-DG	// DXFR242S
MOUNTING	**FILL FLUID**	**OPTIONS**	**FLUSH/CALIBRATION RINGS (OPTIONAL)**
-B?? = SS Armored Capillary, Welded **-W??** = PVC Coated SS Armored Capillary, Welded Note: ?? = Length in feet (e.g. 05 = 5 feet)	**-AS** = Silicone DC200 **-AG** = Glycerin USP **-BH** = Silicone DC704 **-C1** = Fomblin Y06 (inert) **-C2** = Halocarbon 6.3 *See Page 58 for Complete Fill Guide*	**-DG** = Degreased and Bagged **-OX** = Cleaned for Oxygen Service (Shipped in Sealed Bag) **-AU** = Gold Plated Diaphragm (20 microns thick) **-TS** = SS Tag (1-10 Characters) *See Page 55 for Smart Transmitter Attachment Codes*	**DXFR242S** = 2" Pipe, Dual 1/4" Port, 316SS **DXFR322S** = 3" Pipe, Dual 1/2" Port, 316SS *See Page 81 for a Complete List* Wetted

THREADED FLUSH FACE DIAPHRAGM SEALS

DSTF

REOTEMP's Threaded Flush Face Seals are ideal for high and medium pressure applications where process media clogging is a concern. The diaphragm is welded onto the end of the threads allowing for continuous flow of process media across the diaphragm and preventing any build-up of solids. Selection of process connection will greatly impact accuracy and temperature sensitivity.

DSTF05

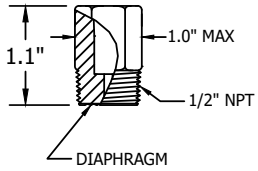

DSTF75

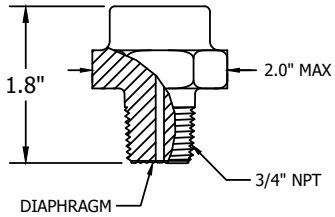

DSTF10

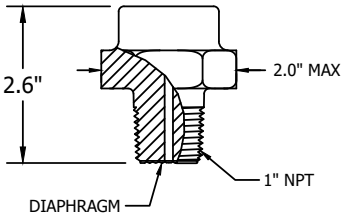

DSTF15

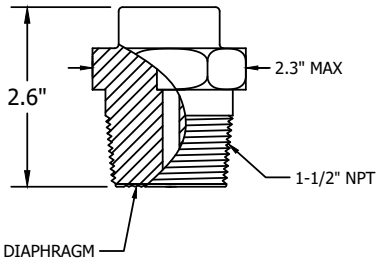

SPECIFICATIONS

Wetted Materials
Body: 316SS, Hast-C
Diaphragm: 316SS, Hast-C

Process Temperature Limits

Process Connection	1/2"	3/4"	1"	1.5"/2"
Limit	0/150°F	20/200°F	-40/400°F	-40/600°F

NOTE: Always use largest thread possible for smaller temperature effect.

Ambient Temperature Limits Determined by the pressure instrument.

Minimum Recommended Span

Male Process Thread NPT	1/2"	3/4"	1"	1.5"/2"
2.5" & 3.5" Gauges	60 psi	30 psi	15 psi	15 psi
4", 4.5", & 6" Gauges	n/a	n/a	100 psi	30 psi
Transmitter (Gauge Pressure)	60 psi*	15 psi*	10 psi*	5 psi
Transmitter (Differential Pressure)	n/a	n/a	n/a	n/a

*Not Recommended for Critical Transmitter Applications.

Maximum Working Pressure Determined by the seal threads.

HOW TO ORDER: Choose options to build a part number. For example: DSTF75SS4-DTD-AS-OX

DSTF	75	SS	4	-DTD	-AS	-OX
MODEL	PROCESS CONNECTION	DIAPHRAGM AND BODY MATERIAL	INSTRUMENT CONNECTION	MOUNTING	FILL FLUID	OPTIONS
DSTF = Threaded Flush Face Diaphragm Seal	**05** = 1/2" Male NPT **75** = 3/4" Male NPT **10** = 1" Male NPT **15** = 1-1/2" Male NPT **20** = 2" Male NPT **G1** = 1" BSPP (G1) **GH** = 1.5" BSPP **G2** = 2" BSPP	**SS** = 316LSS **HC** = Hast. C-276 Wetted	**4** = 1/4" NPT **2** = 1/2" NPT[1] [1]Not Available with 1/2" NPT Process Connection	**-DTD** = Direct Mount, Threaded **-DWD** = Direct Mount, Welded **-STW** = 3" Cooling Standoff **-RTR** = 6" Cooling Tower, Welded *See Page 57 for Complete Mounting Guide* **-YYY** = No Instrument Mount, Dry Seal Only	**-AS** = Silicone DC200 **-AG** = Glycerin USP **-C2** = Halocarbon 6.3 *See Page 58 for Complete Fill Guide* **-XX** = No Seal Fill, Dry Seal Only	**-OX** = Cleaned for Oxygen Service (Shipped in Sealed Bag) **-AU** = Gold Plated Diaphragm (20 Microns Thick) **-TS** = SS Tag (1-10 Characters)

REOTEMP INSTRUMENTS

ISOLATION RING FLOW THRU SEAL

ORR

The REOTEMP Isolation Ring Flow Thru Seal boasts an In-Line Flow-Thru design ideal for waste water, slurries, or abrasives. Mounted between pipe flanges or threaded in-line, it has a tough but sensitive elastomer lining. One unique feature of this seal is the ability to mount multiple instruments on one seal.

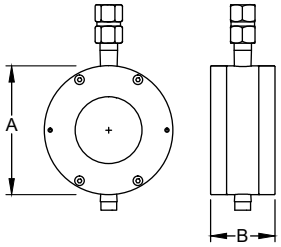

Wafer

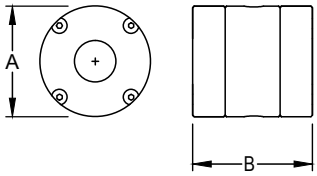

Threaded

SPECIFICATIONS

Materials	Body: Carbon Steel, 316SS
Wetted Materials	End Flange: Carbon Steel, 316SS. Diaphragm/Sleeve: Buna-N, PTFE EPDM, Natural Rubber and more.
Process Temperature Limits	

Sleeve Material	Limit
Buna-N	225ºF
Fluorocarbon	400ºF
PTFE	350ºF
Silicone	450ºF
EPDM	300ºF
Natural Rubber	212ºF

Ambient Temperature Limits	Determined by the pressure instrument.

Type	Nominal Pipe Size	A	B	Approx. Weight (lbs)
Iso-Ring (Wafer)	2"	4"	2"	4
	4"	6.75"	1.5"	8
	6"	8.63"	1.5"	10
	8"	10.88"	1.5"	15
Iso-Spool (Threaded)	1" NPT	3"	3.25"	10
	1-1/2" NPT	3.5"	3.25"	12

*Red Valve brand is available if the application requires. Choose **-RV** as option code. Red Valve dimensions may differ from above.*

HOW TO ORDER: Choose options to build a part number. For example: ORTCC2020-TRE-AG-TS

ORT	C	C	2	020	-TRE	-AG	-TS
MODEL	**BODY**	**END FLANGE**	**DIAPHRAGM/ SLEEVE**	**PIPE SIZE**	**MOUNTING**	**FILL FLUID**	**OPTIONS**
ORR = Ring Seal, Flanged Wafer **ORT** = Threaded Spool **ORB**= Ring Seal, Bolt-thru	**C** = Carbon Steel **S** = 316 SS	**C** = Carbon Steel **S** = 316 SS Wetted	**1** = Buna **2** = Fluorocarbon **3** = PTFE **4** = EPDM **5** = Silicone* *ORT Only Wetted	**020** = 2" Flanged **040** = 4" Flanged **060** = 6" Flanged **080** = 8" Flanged **010** = 1" NPT Threaded* **015** = 1.5" NPT Threaded* Other sizes available. *ORT Only	**-DTD** = Direct Mount, Threaded **-TRE** = Goal Post, Low Pressure **-TRX** = Goal Post, Heavy Duty *See Page 57 for Complete Mounting Guide* **-YYY** = No Instrument Mount, Dry Seal Only	**-AS** = Silicone DC200 **-AG** = Glycerin USP **-BP** = Propylene Glycol *See Page 58 for Complete Fill Guide* **-XX** = No Fill Fluid	**-IR** = Instrument Removal Device **-TS** = SS Tag (1-10 Characters) **-RV** = Red Valve Brand

WELDED MINI-SEAL

REOTEMP Welded Mini Seals are ideal for applications where a gauge or general purpose transmitter cannot be installed directly into the process media. REOTEMP mini seals are a one-piece, all-welded construction that offer a durable, economical choice for protecting a pressure instrument from corrosion, clogging, or high process temperatures.

MS4G

MS6G

MS8Q

SPECIFICATIONS

Materials

Upper Housing: 316SS.
Diaphragm: 316SS Hast C-276, Monel.
Lower Housing: 316SS, Hast C-276, Monel

Process Temperature Limits

MS4	-40°F/300°F
MS6	-40°F/400°F
MS8	-110°F/750°F

Ambient Temperature Limits

Determined by the pressure instrument.

Minimum Recommended Pressure Ranges

	MS4	MS6	MS8
2.5” & 3.5” Gauges	30 psi	15 psi	15 psi
4”, 4.5”, & 6” Gauges	n/a	60 psi	30 psi
Transmitter (Gauge Pressure)	15 psi	10 psi	150” WC
Transmitter (Differential Pressure)	n/a	n/a	300” WC

Maximum Working Pressure at 100°F

	316SS	Hast-C	Monel
MS4	2,000 psi	1,000 psi	2,000 psi
MS6	1,000 psi	N/A	N/A
MS8 (1/4 or 1/2” connectors)	5,000 psi	2,000 psi	2,000 psi
MS8 (3/4” or 1")	2,000 psi	N/A	N/A

Weight

MS4	.2 lbs
MS6	.4 lbs
MS8	.8 lbs

FEATURES / BENEFITS

- Economical Choice for Protecting a Pressure Instrument from Severe Process Media
- All-welded Design Reduces Fugitive Emission Leaks
- Available with PulsePlus™ Pulsation Dampening
- Tamper Resistant

MS4G

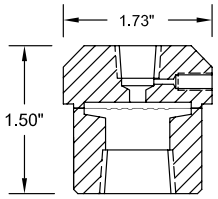

Depicted with female Process Connection.
Height will change with male fitting.

MS6G

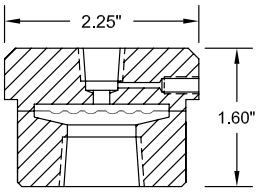

Depicted with female Process Connection.
Height will change with male fitting.

MS8Q

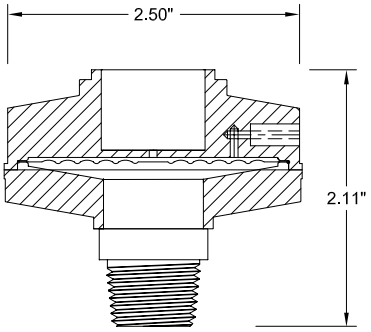

Depicted with 1/2” Male Connection.
Height will change with female fitting.

WELDED MINI-SEAL

HOW TO ORDER: Choose options to build a part number. For example: MS4G2F4XS-DTD-AS-PP

MS4G	2	F4	X	S
SEAL TYPE	**INSTRUMENT CONNECTION**	**PROCESS CONNECTION**	**FLUSH PORT**	**MATERIAL**
MS4G = Compact Mini Seal **MS6G** = Standard Mini Seal **MS8Q** = Process Seal *Note: If mounting an MS8 to a REOTEMP gauge, use part builder on Page 10.*	**4** = 1/4" Female NPT **2** = 1/2" Female NPT (MS6 Only) **W** = Welded Connection (MS8 Only)	**F4** = 1/4" FNPT **F2** = 1/2" FNPT **M4** = 1/4" MNPT **M2** = 1/2" MNPT **M3** = 3/4" MNPT (MS8 only) **M1** = 1" MNPT (MS8 only)	**X** = None **F** = 1/4" Female NPT	**S** = 316LSS **H** = Hast C-276* **M** = Monel A400* *See Maximum Working Pressure Table on Page 77 for Material Availability by Seal Type Wetted

-DTD	-AS	-PP
INSTRUMENT MOUNT	**SYSTEM FILL FLUID**	**OPTIONS**
-DTD = Direct Mount, Threaded **-DWD** = Direct Mount, Welded **-RTR** = 6" Cooling Tower **-STW** = 3" Cooling Tower **-A??** = Armored Capillary, Threaded **-B??** = Armored Capillary, Welded **-W??** = PVC Coated Armor, Welded **-P??** = PVC Coated Armor, Threaded Note: ?? = Length in feet (e.g. 05 = 5 feet) *See Page 57 for Complete Mounting Guide* **-YYY** = Dry Seal, No Instrument	**-AS** = Silicone DC200 **-AG** = Glycerin USP **-BH** = Silicone DC704 **-C1** = Fomblin Y06 (inert) **-C2** = Halocarbon 6.3 *See Page 58 for Complete Fill Guide* **-XX** = No Fill Fluid	**-PP** = Pulse Plus™ (Pulsation Protection) **-TS** = SS Tag (1-10 Character) **-FW** = Fill Port Welded Closed **-PM** = Positive Material Identification Certification

Using a REOTEMP Gauge?
If mounting an MS8 to a REOTEMP gauge, use the part builder on Page 10 or the online configurator at reotemp.com/configurators

SANITARY TRI-CLAMP® DIAPHRAGM SEAL

DSTC15

Certified

REOTEMP's Sanitary Tri-Clamp® Diaphragm Seals are ideal for applications in the food and beverage, dairy, and pharmaceutical industries or wherever Tri-Clamp connections are used. Reotemp will mount and fill a variety of instruments to Tri-Clamp seals including Digital Pressure Gauges, Transmitters, and Switches. All Sanitary Diaphragm Seal Assemblies manufactured by Reotemp are 3-A Certified.

	Type A	Type B				
Process Connection	3/4"*	1.5"	2"	2.5"	3"	4'
Outer Diameter (C)	1"	2"	2.5"	3.1"	3.6"	4.7"
Diaphragm (D)	.65"	1.4"	1.9"	2.2"	2.5"	3.6"
Height (H)	1'	1.3"	1.3"	1.3"	1.3"	1.6"

*DSTC75 ONLY
Note: Height is subject to change based on the adapter required to fit instrument to seal.

SPECIFICATIONS

Materials — Body: 316L; Diaphragm: 316L

Process Temperature Limits

Process Connection	3/4"	1.5"	2"	2.5" & 3"
Temperature Limit	0/150°F	-40/250°F	-40/400°F	-40/750°F

Ambient Temperature Limits — Determined by the pressure instrument.

Wetted Surface Finish — 18-24 Ra

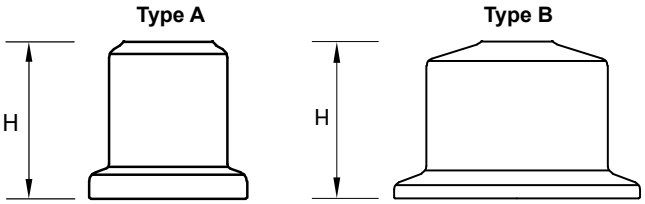

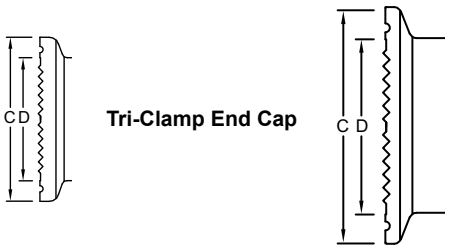

Tri-Clamp End Cap

HOW TO ORDER: Choose options to build a part number. For example: DSTC20SS4-DWD-BN-OX

DSTC	20	SS	4	-DWD	-BN	-OX
MODEL	TRI-CLAMP® SIZE	MATERIAL	INSTRUMENT CONNECTION	MOUNTING	FILL FLUID	OPTIONS
DSTC = Diaphragm Seal Sanitary Tri-Clamp **DSCI** = Diaphragm Seal Sanitary "I"-Line Cherry Burrell	**75** = 3/4" (Also Fits a 1/2" Clamp)* **15** = 1 1/2" (Also Fits a 1" Clamp) **20** = 2" **25** = 2.5" **30** = 3" **40** = 4" *Not available in "I" Line.	**SS** = 316L SS **HC** = Hast. C-276	**4** = 1/4" NPT **W** = Low-Volume	**-DWD** = Direct Mount, All Welded **-DTD** = Direct Mount, Threaded (not standard for sanitary applications) **-RTR** = 6" Cooling Tower, Welded **-STW** = 3" Cooling Standoff **-WXX** = PVC Coated SS Armored Capillary, Welded to Seal, XX = length in feet *See Page 57 for Complete Mounting Guide* **-YYY** = No Instrument Mount, Dry Seal Only	**-AG** = Glycerin **-BN** = NEOBEE M20 **-AS** = Silicone DC200 **-BS** = Food-Grade Silicone *See Page 58 for Complete Fill Guide* **-XX** = No Fill Fluid	**-EP** = Electropolished Diaphragm **-OX** = Cleaned for Oxygen or Chlorine Service (shipped in sealed bag) **-TS** = SS Tag (1-10 Characters)

SANITARY TANK SPUD DIAPHRAGM SEAL

DSTP40

Weld Spud (Optional)

Certified

REOTEMP's Sanitary Tank Spud Diaphragm Seals are ideal for applications in the food and beverage, dairy, and pharmaceutical industries. Reotemp will mount and fill a variety of instruments to Tank Spud Diaphragm Seals including Digital Pressure Gauges, Transmitters, and Switches. All Sanitary Diaphragm Seal Assemblies manufactured by REOTEMP are 3-A Certified.

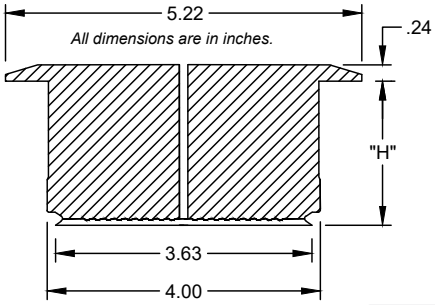

DSTP40

Size	Extension Length "H"
2"	2.11"
6"	6.11"

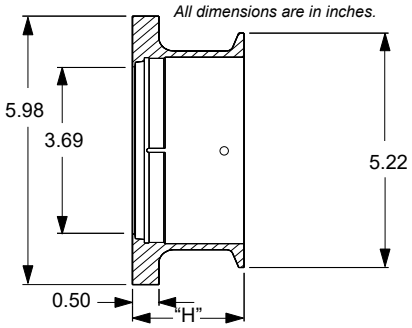

Weld Spud (Optional)

SPECIFICATIONS

Materials	Body: 316L Diaphragm: 316L O-Ring: EPDM (FDA Approved)
Process Temperature Limits	-40 to 250°F
Ambient Temperature Limits	Determined by the pressure instrument.
Wetted Surface Finish	18-24 Ra
Max Working Pressure	600 psig (Clamp Rating)

HOW TO ORDER: Choose options to build a part number. For example: DSTP40SS46X-DWD-BN-OX

DSTP40	SS	4	6	X	-DWD	-BN	-OX
MODEL	**DIAPHRAGM & EXTENSION**	**INSTRUMENT CONNECTION**	**EXTENSION LENGTH "H"**	**WELD SPUD FIXTURE**	**MOUNTING**	**FILL FLUID**	**OPTIONS**
DSTP40 = Sanitary Tank Spud Diaphragm Seal	**SS** = 316L SS **HC** = Hastelloy C-276 Wetted	**W** = Low-Volume Connection for Smart Transmitters **2** = 1/2" NPT **4** = 1/4" NPT	**2** = 2" **6** = 6"	**X** = Not Included **W** = Weld Spud Included	**-DWD** = Direct Mount, All Welded **-DTD** = Direct Mount, Threaded (not standard for sanitary applications) **-RTR** = 6" Cooling Tower, Welded **-STW** = 3" Cooling Standoff **-WXX** = PVC Coated SS Armored Capillary, Welded to Seal, XX = length in feet *See Page 57 for Complete Mounting Guide* **-YYY** = No Instrument Mount, Dry Seal Only	**-BN** = NEOBEE M20 **-AG** = Glycerin **-AS** = Silicone DC200 *See Page 58 for Complete Fill Guide* **-XX** = No Fill Fluid	**-EP** = Electropolished Diaphragm **-OX** = Cleaned for Oxygen or Chlorine Service (shipped in sealed bag) **-TS** = SS Tag (1-10 Characters) **-5T** = Clamp Fixture (5" Tri-clamp)

Tri-Clamp® is a registered trademark of Alpha Laval Inc.

DIAPHRAGM SEAL ACCESSORIES

DRY CAPILLARY

- Used When Pressure Instrument Needs to be Removed from Direct Contact of Installation Point
- All-welded 316SS Construction
- Available up to 100 ft. in Length (Max 40 ft. in diaphragm seal assembly)
- Max Working Pressure of 10,000 psig
- 2mm ID Standard
- Note: if capillary is part of a filled diaphragm seal system use 3 digit mounting code per page 57 (Example: "A25" = 25' of armored capillary, threaded to seal)

HOW TO ORDER: Choose options to build a part number. For example: DXC4M4M10A-TS

DXC	4M	4M	10	A	-TS
MODEL	INSTRUMENT CONNECTION	PROCESS CONNECTION	LENGTH IN FEET	PROTECTION	OPTIONS
DXC = Capillary	**4M** = 1/4" Male NPT **4F** = 1/4" Female NPT **2M** = 1/2" Male NPT **2F** = 1/2" Female NPT	**4M** = 1/4" Male NPT **4F** = 1/4" Female NPT **2M** = 1/2" Male NPT **2F** = 1/2" Female NPT	**05** = 5 ft. **10** = 10 ft. **20** = 20 ft. **??** = Specify, Length in feet	**A** = Stainless Steel Armor **P** = PVC Coated Stainless Steel Armor **B** = Bare Capillary Tubing (Rare)	**-3M** = 3mm ID (10 ft. Max) **-TS** = Stainless Steel Tag (1-10 Characters)

FLUSH RINGS

- Used to Flush Process Fluid or Provide Access for Field Calibrations
- Machined from Solid Bar Stock
- Pressure Ratings Up to ANSI Class 2500
- For Use with W9FF and W9FR Diaphragm Seals (Raised Face)

HOW TO ORDER: Choose options to build a part number. For example: DXFR322S-PM

DXFR	3	2	2	S	-PM
MODEL	PIPE SIZE	PORT SIZE	NUMBER OF PORTS	MATERIAL	OPTIONS
DXFR = Flush Ring	**H** = 1-1/2" ANSI **2** = 2" ANSI **3** = 3" ANSI **4** = 4" ANSI	**4** = 1/4" NPT **2** = 1/2" NPT	**1** = One Port **2** = Two Ports (180° Opposed) **4** = Four Ports (90° Apart)	**S** = 316SS **H** = Hast-C276 **M** = Monel **J** = Titanium **2** = Duplex 2205 **D** = Alloy 20	**-MR** = Mill Certification **-PM** = Positive Material Identification Certification **-GS** = 1/4" NPT SS Plug **-G2** = 1/2" NPT SS Plug

OTHER DIAPHRAGM SEAL TYPES

REOTEMP provides many special use and custom diaphragm seals. Consult customer service for specific application assistance.

FLANGED FLOW THRU

SADDLE WELD

WEDGE TYPE

PULP/PAPER

THREADED FLOW THRU

OTHER SERVICES

- Remote Seal Assembly Repair
- Hydrostatic Testing
- Positive Material Identification
- Custom Diaphragm Seal Design

DIAPHRAGM SEAL OPTIONS

Visit reotemp.com

- ✓ Check Stock
- ✓ Get Price
- ✓ Configure Part #
- ✓ Download PDF Data Sheets

		MS4 MS6 MS8	W5 W6 W7	T5 T6 V5	W9FF W9FR	W9XT	W9FP	DSTC75	DSTC15 AND LARGER	DSTF05	DSTF75 AND LARGER	OR	DXFR
PULSATION PROTECTION (ONLY AVAILABLE WITH REOTEMP PRESSURE GAUGE MOUNTED TO SEAL)													
-PP	Pulse Plus™	✓	✓	✓	✓	✓	N/A	N/A	✓	N/A	✓	✓	N/A
DIAPHRAGM COATING													
-AU	Gold Plated Diaphragm	N/A	✓	N/A	✓	✓	✓	✓	✓	✓	✓	N/A	N/A
-TC	Teflon Coated Diaphragm PTFE	N/A	✓	N/A	✓	✓	✓	N/A	✓	N/A	✓	N/A	N/A
-EP	Electropolished Diaphragm	N/A	N/A	N/A	N/A	N/A	N/A	✓	✓	✓	✓	N/A	N/A
FILL													
-FW	Fill Port Welded Closed	STD[1]	✓	✓	✓	✓	✓	✓	✓	✓	✓	N/A	N/A
-VF	Fill for Vacuum Service	N/A	✓	N/A	✓	✓	✓	N/A	✓	N/A	✓	N/A	N/A
CLEANING AND FINISH													
-DG	Degreased, Shipped in Sealed Bag	✓	✓	✓	✓	✓	✓	✓	✓	✓	✓	N/A	✓
-OX	Cleaned for Oxygen Service per ASME B40.1	✓	✓	N/A	✓	✓	✓	✓	✓	✓	✓	N/A	✓
-OY	Cleaned for Oxygen Service per MIL-STD-1330D	✓	✓	N/A	✓	✓	✓	✓	✓	✓	✓	N/A	✓
PLUG FOR FLUSH PORT													
-GS	1/4” SS Plug Installed	STD	STD	STD	N/A	N/A	N/A	N/A	N/A	N/A	N/A	N/A	✓
-JS	1/2” SS Plug Installed	N/A	STD	STD	N/A	N/A	N/A	N/A	N/A	N/A	N/A	N/A	✓
-GH	1/4” Hast C Plug Installed	✓	✓	✓	N/A	N/A	N/A	N/A	N/A	N/A	N/A	N/A	✓
-JH	1/2” Hast C Plug Installed	N/A	✓	✓	N/A	N/A	N/A	N/A	N/A	N/A	N/A	N/A	✓
-GM	1/4” Monel Plug Installed	N/A	✓	✓	N/A	N/A	N/A	N/A	N/A	N/A	N/A	N/A	✓
-JM	1/2” Monel Plug Installed	N/A	✓	✓	N/A	N/A	N/A	N/A	N/A	N/A	N/A	N/A	✓
TAG OPTION													
-TS	Stainless Steel Tag (1-10 Characters)	✓											
-TM	Stainless Steel Tag (11-80 Characters)	✓											
-TP	Paper Tag	✓											
CERTIFICATION OPTIONS													
-NC	Certificate of NACE Compliance	✓	✓	N/A	✓	✓	✓	N/A	N/A	✓	✓	N/A	✓
-CM	General Material Conformance	✓	✓	✓	✓	✓	✓	✓	✓	✓	✓	✓	✓
-MR	MTR - Mill Test Report Certificate	✓	✓	✓	✓	✓	✓	✓	✓	✓	✓	N/A	✓
-PM	PMI - Positive Material Identification Certificate	✓	✓	✓	✓	✓	✓	✓	✓	✓	✓	N/A	✓
-HT	Hydrostatic Test per ASME B31.3	✓	✓	✓	✓	✓	✓	✓	✓	✓	✓	N/A	N/A
-HL	Helium Leak Test Certificate	✓	✓	N/A	✓	✓	✓	✓	✓	✓	✓	N/A	N/A

✓	Indicates that the option is available
N/A	Indicates the option is not available

[1] Standard on MS8, available on MS4 & MS6.

DIAPHRAGM SEAL CONFIGURATOR

Visit reotemp.com

- ✓ Check Stock
- ✓ Get Price
- ✓ Configure Part #
- ✓ Download PDF Data Sheets

Try the new and easy-to-use Diaphragm Seal Configurator!

Visit **reotemp.com/seals** and click the "Configure Now" button.

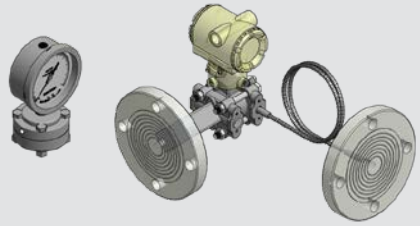

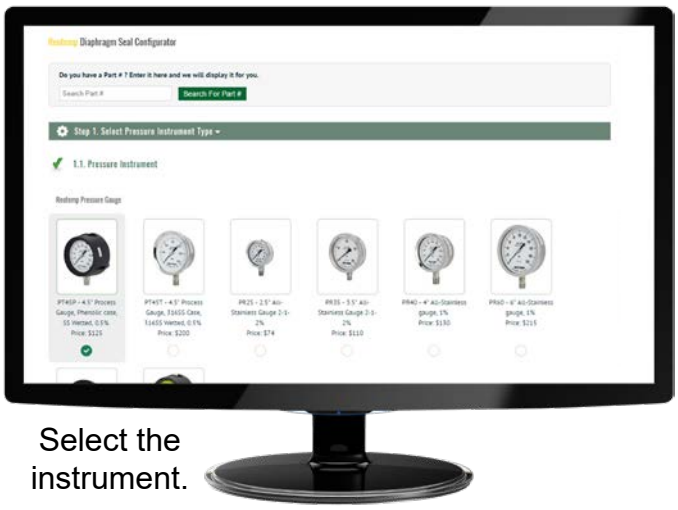

Select the instrument.

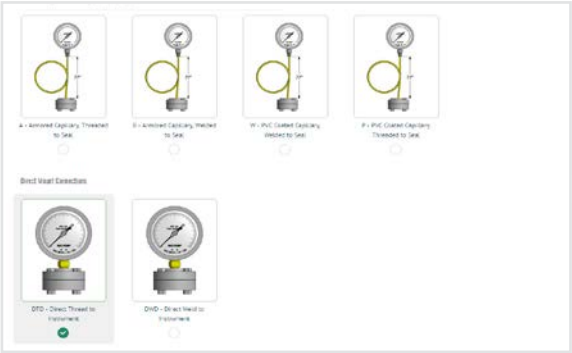

Select the mounting style.

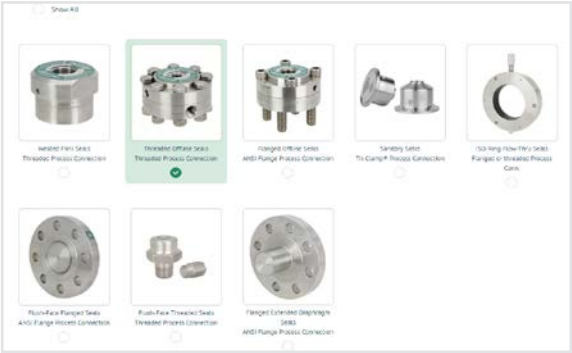

Select the seal type and follow our easy guided steps.

- ✓ Part Number and Description of Assembly with Price
- ✓ Engineering Drawing of Assembly
- ✓ Easily Save your Quote and Put in a Purchase Request

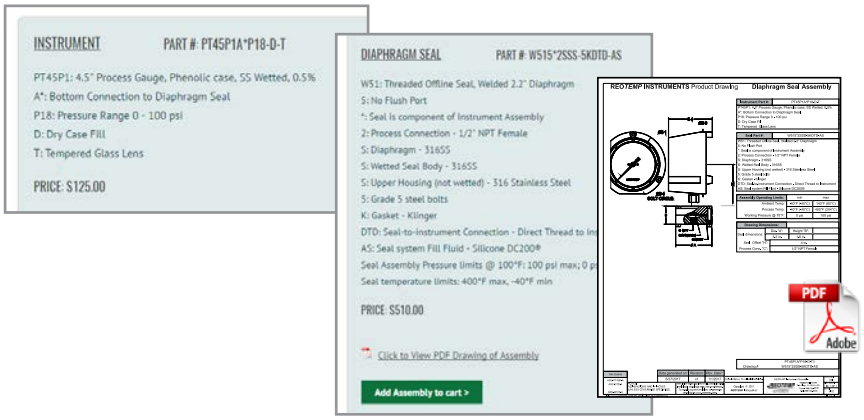

REOTEMP®
INSTRUMENTS

INSTRUMENT VALVES & MANIFOLDS

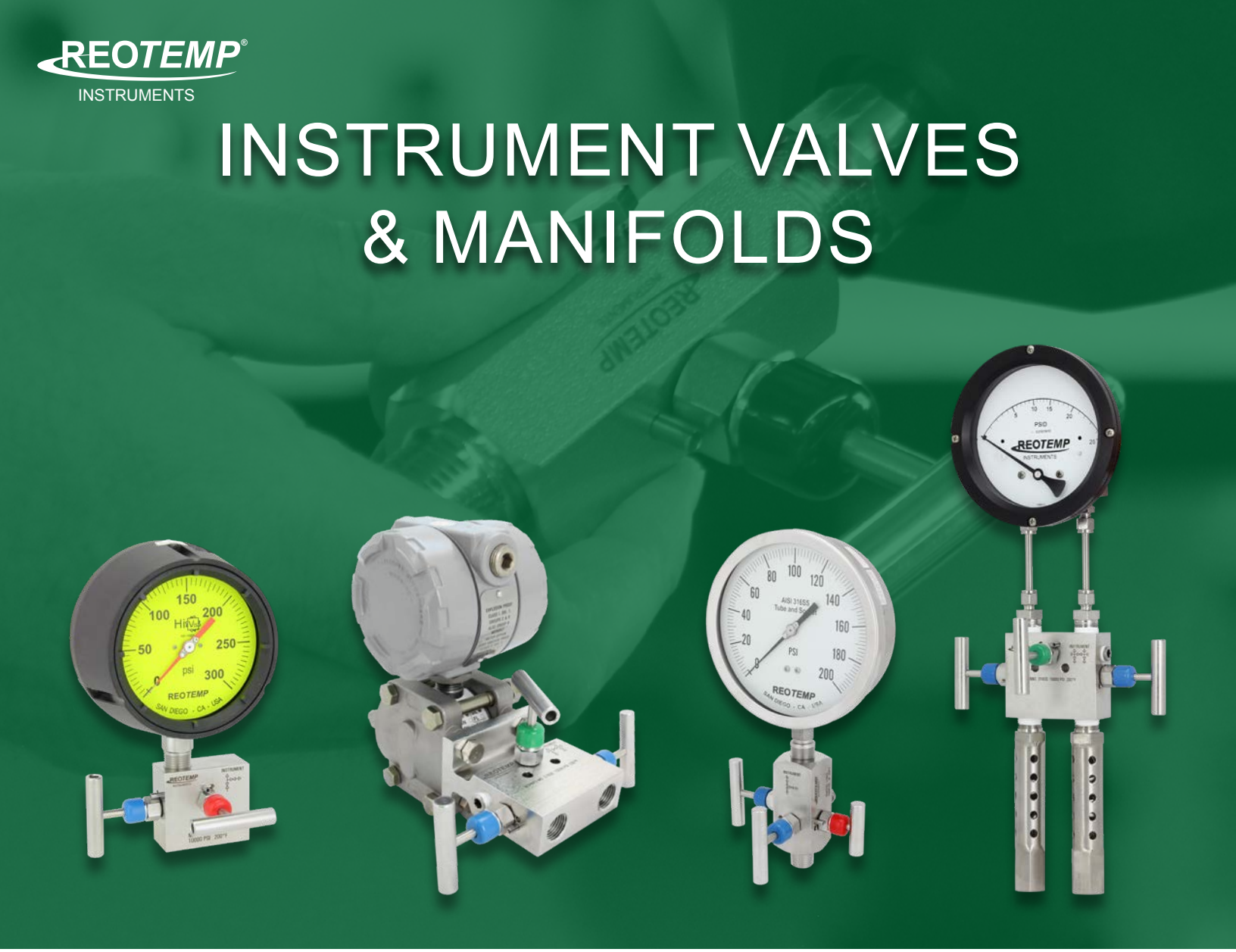

Design: REOTEMP offers a full line of USA made instrument valves and manifolds. Whether your need is to safely remove instrumentation, pressure check or calibrate your process, test differential gauges/transmitters, or throttle flow in the system Reotemp has a valve to suit your application.

Quality: REOTEMP is a globally recognized ISO 9001:2008 manufacturer of pressure instrumentation. All instrument valves conform to MSS SP-99 standards, and all valves with packing conform to MSS SP-132 packing standards. All valves and manifolds are helium leak checked to 1 x 10-4 ml/s for ultimate performance. REOTEMP warrants all US made valves against defective workmanship or materials under normal use and service for three years following the date of shipment.

Additional Testing Services: Other in-house services include Mill Test Reports (MTRs), Positive Material Identification (PMI), Hydrostatic Testing, and Oxygen Cleaning (O_2).

Configurations: Standard body materials include 316SS and zinc-plated carbon steel. Other non-standard materials are available upon request and may require a custom design and build. Various connections sizes are available from 1/8" – 2" NPT on most needle valve configurations. Gauge valves are available with connections from ¼" – ¾" NPT.

Instrument/Valve Mounting Options: REOTEMP offers in house mounting services by pre-installing pressure instrumentation on valve assemblies prior to shipping to allow for quick and easy installation. REOTEMP mounting services are available when mounting your REOTEMP pressure instrument to a REOTEMP gauge valve, or when mounting a REOTEMP differential pressure gauge on a 3 or 5 valve manifold. Select from a variety of options and orientations.

INSTRUMENT & VALVE ASSEMBLIES

REOTEMP offers in house mounting services by preinstalling pressure (or dP) instrumentation on valve assemblies prior to shipping to allow for stress free/easy installation. Select from a variety of standard designs or contact your REOTEMP customer service representative to design a custom assembly to suit your desired application.

- ✓ Inspector's Lacquer & Threads Sealed with Loctite 567™
- ✓ 100% Argon Leak Checked (Maximum 1,000 psi)
- ✓ Optional ID Tag for Complete Assembly
- ✓ Packaged for Out of Box Installation
- ✓ DP Assemblies Mounted with 316SS Compression Fittings & 316 Tubing
- ✓ To Customize Your Design Contact REOTEMP Customer Service

HOW TO ORDER: Choose options to build a part number.

PT45P1A2P20-D-T-TS	// G20H22S	-A1
SELECT PRESSURE GAUGE	SELECT VALVE	SELECT MOUNT

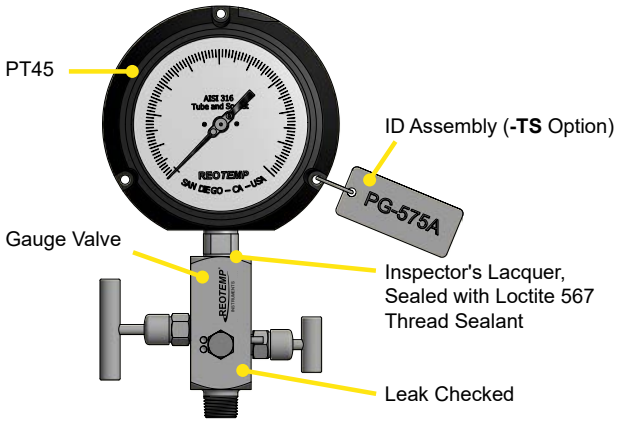

-A1	Valve mounted to pressure instrument. (Example: Gauge, Switch Direct Mount or Transmitter.)

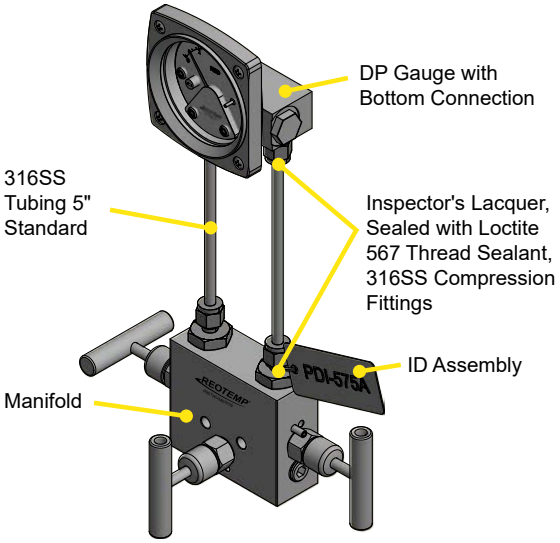

-A4	Bottom mounted differential pressure gauge to manifold.

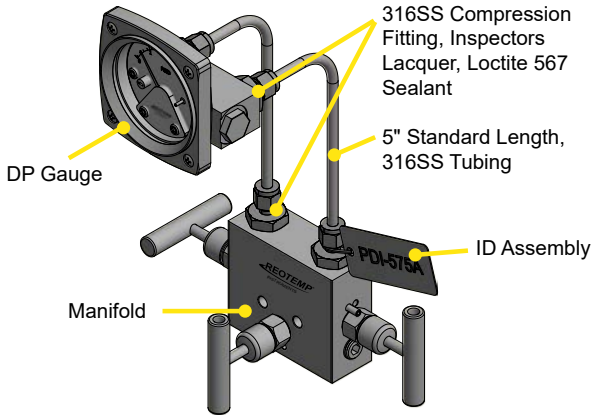

-A5	Back mounted threaded differential pressure gauge to manifold.

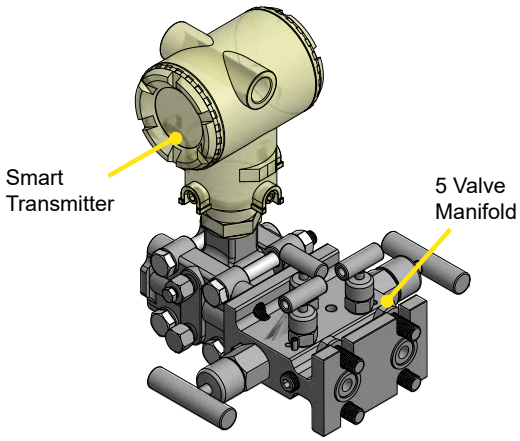

-A6	Differential transmitter to manifold.

VALVES

SINGLE VALVE BLOCK & BLEED

REOTEMP's single valve block and bleed allows users to isolate pressure to their instrument, bleed off excess process, and remove an instrument without disturbing or shutting down the system. A variety of options are available to suit just about every application.

Male-Female

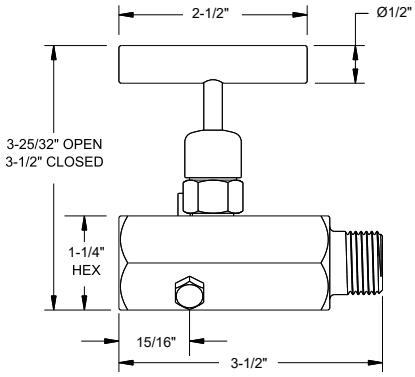

Female-Female

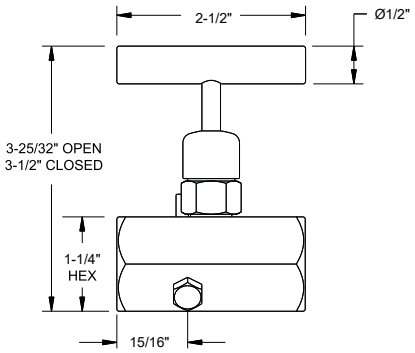

FEATURES / BENEFITS

- 0.090" Bleed Hole Controlled by a 1/4"-20 UNF-2A Bleed Screw
- FKM O-ring Seal and PTFE Back-up Ring Below the Stem Threads to Protect from Corrosion and Galling; Soft Seat Comes Standard with Delrin Seat
- PTFE or Grafoil Packing Optional
- All Stems are 316SS
- Vinyl Dust Cap for Bonnet & Stem (Non-packing)
- Rolled Threads for Strength Durability, and Ease of Use
- All Valves are Helium Leak Tested for Optimal Performance

SPECIFICATIONS

Body Material	316 Stainless Steel, Zinc-nickel Plated Carbon Steel
Pressure Rating	Hard Seat - 10,000 psi at 200°F, Soft Seat - 6,000 psi at 200°F.
Temperature Rating	Standard up to 200°F; Available up to 1,000°F. See Pressure/Temperature Charts on Page 97 for More Detailed Information.
Orifice	0.187"
Flow	Hard Seat C_V: 0.44, Soft Seat C_V: 0.76
Connections	1/4" or 1/2"

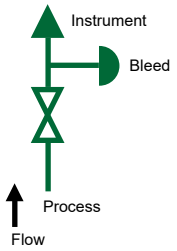

HOW TO ORDER: Choose options to build a part number. For example: G10H22S-P1NC

G10	H	22	S	-P1NC*
MODEL	**SEAT TYPE**	**CONNECTION SIZE**	**MATERIAL**	**OPTIONS**
G10 = Single Valve Block & Bleed	**H** = Hard Seat **S** = Soft Seat	**44** = 1/4" MxF **4F** = 1/4" FxF **22** = 1/2" MxF **2F** = 1/2" FxF	**C** = Carbon Steel **S** = Stainless Steel **H** = Hastelloy C **M** = Monel	*Available on G10:* **-P1** = PTFE Packaging *Available on G10H:* **-P2** = Grafoil Packing (316SS Body Rating 1,000°F at 1,500 psi) **See 98 for Additional Options*

REOTEMP INSTRUMENTS

2-VALVE BLOCK & BLEED

Male-Female

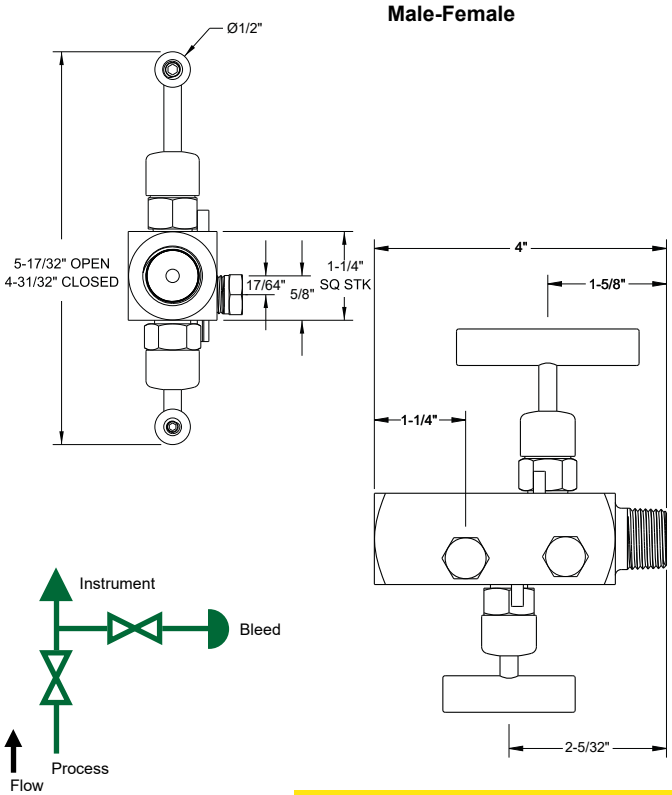

REOTEMP's 2-Valve Block & Bleed allows users more options to control their venting. The secondary valve bleeds process through 1/4" FNPT port giving the user the ability to vent to atmosphere or capture the process by directly piping to the valve body.

FEATURES / BENEFITS

- 1/4" FNPT Bleed Port
- FKM O-ring Seal and PTFE Back-up Ring Below the Stem Threads to Protect from Corrosion and Galling; Soft Seat comes Standard with Delrin Seat
- PTFE or Grafoil Packing Optional
- All Stems are 316SS
- Vinyl Dust Cap for Bonnet & Stem (Non-packing)
- Rolled Threads for Strength, Durability, and Ease of Use
- All Valves are Helium Leak Tested for Optimal Performance

SPECIFICATIONS

Body Material	316 Stainless Steel, Zinc-nickel Plated Carbon Steel
Pressure Rating	Hard Seat - 10,000 psi at 200°F, Soft Seat - 6,000 psi at 200°F.
Temperature Rating	Standard up to 200°F; Available up to 1,000°F. See Pressure/Temperature Charts on Page 97 for More Detailed Information.
Orifice	0.187"
Flow	Hard Seat C_V: 0.44, Soft Seat C_V: 0.76
Connections	1/4" or 1/2"

HOW TO ORDER: Choose options to build a part number. For example: G20H22S-P2NC

G20	H	22	S	-P2NC*
MODEL	**SEAT TYPE**	**CONNECTION SIZE**	**MATERIAL**	**OPTIONS**
G20 = 2-Valve Block & Bleed	**H** = Hard Seat **S** = Soft Seat	**44** = 1/4" MxF **4F** = 1/4" FxF **4R** = 1/4" FxM **22** = 1/2" MxF **2F** = 1/2" FxF **2R** = 1/2" FxM	**C** = Carbon Steel **S** = Stainless Steel **H** = Hastelloy C **M** = Monel	*Available on G10:* **-P1** = PTFE Packaging **-EX** = Extended Valve Body *Available on G10H:* **-RV** = Right Vent **-P2** = Grafoil Packing (316SS Body Rating 1,000°F at 1,500 psi) **See 98 for Additional Options*

VALVES

DOUBLE BLOCK & BLEED

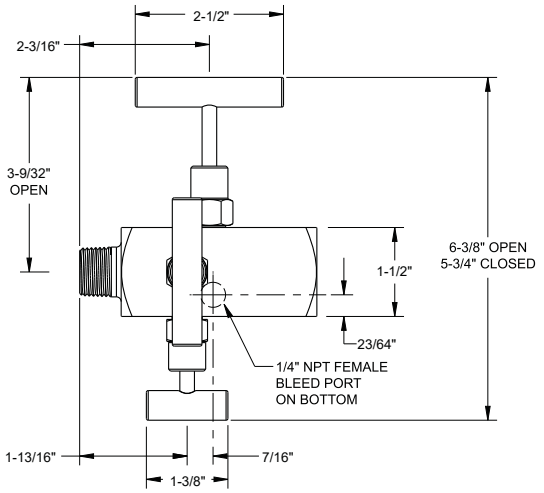

Top View

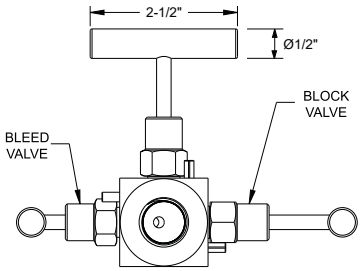

Side View

REOTEMP's Double Block & Bleed allows users more options to control their venting as well as added safety when removing instruments. This valve features an additional shutoff valve between the vent and the instrument. A bleed valve allows users to bleed the process through a 1/4" FNPT port, giving the ability to vent to atmosphere or capture the process by directly piping to the valve body.

FEATURES / BENEFITS

- 1/4" FNPT Bleed Port
- FKM O-ring Seal and PTFE Back-up Ring Below the Stem Threads to Protect from Corrosion and Galling
- PTFE or Grafoil Packing Optional
- All Stems are 316SS
- Vinyl Dust Cap for Bonnet & Stem (Non-packing)
- Rolled Threads for Strength, Durability, and Ease of Use
- All Valves are Helium Leak Tested for Optimal Performance

SPECIFICATIONS

Body Material	316 Stainless Steel, Zinc-nickel Plated Carbon Steel
Pressure Rating	Hard Seat - 10,000 psi at 200°F
Temperature Rating	Standard up to 200°F; Available up to 1,000°F. See Pressure/Temperature Charts on Page 97 for More Detailed Information.
Orifice	0.187"
Flow	Hard Seat C_V: 0.44
Connections	1/4" or 1/2"

HOW TO ORDER: Choose options to build a part number. For example: G30H22S-P2NC

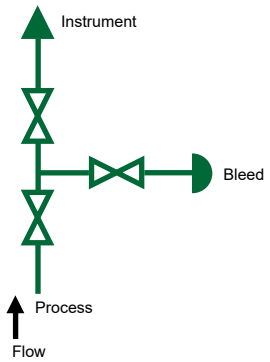

G30	H	22	S	-P2NC*
MODEL	SEAT TYPE	CONNECTION SIZE	MATERIAL	OPTIONS
G30 = 3-Valve Double Block & Bleed	**H** = Hard Seat **S** = Soft Seat	**44** = 1/4" MxF **4F** = 1/4" FxF **4R** = 1/4" FxM **22** = 1/2" MxF **2F** = 1/2" FxF **2R** = 1/2" FxM	**C** = Carbon Steel **S** = Stainless Steel **H** = Hastelloy C **M** = Monel	*Available on G30:* **-EX** = Extended Body Design **-RV** = Right Vent **-P1** = PTFE Packaging *Available on G30H:* **-P2** = Grafoil Packing (316SS Body Rating 1,000°F at 1,500 psi)

*See 98 for Additional Options

VALVES

REOTEMP INSTRUMENTS

MULTIPORT BLOCK & BLEED

Need flexibility when installing your instruments? REOTEMP's Multiport Gauge Valve features a single shutoff along with three individual 1/2" FNPT instrument ports expanding instrument installation and venting options. The user can select from a variety of bleeds, valves, and plugs to obtain their desired setup.

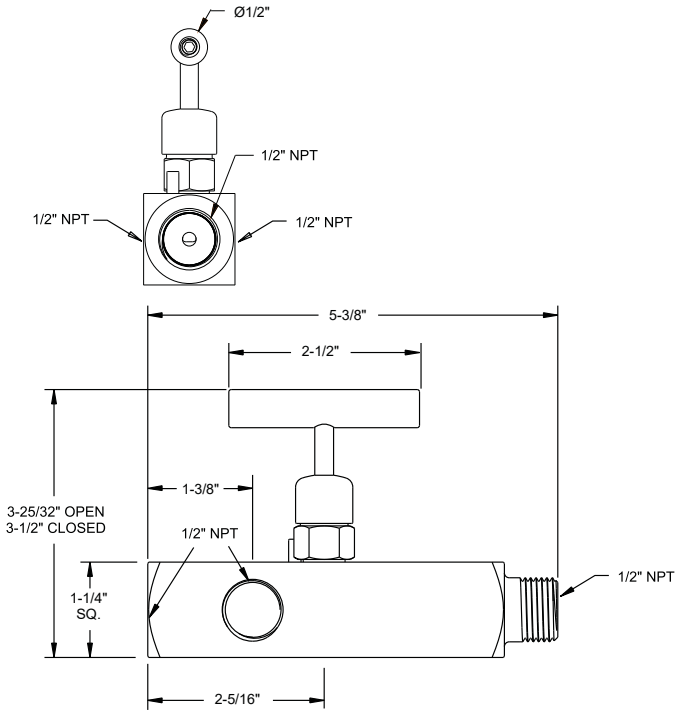

FEATURES / BENEFITS

- 3 - 1/2" FNPT Instrument Ports
- FKM O-ring Seal and PTFE Back-up Ring Below the Stem Threads to Protect from Corrosion and Galling; Soft Seat Comes Standard With Delrin Seat
- PTFE or Grafoil Packing Optional
- All Stems are 316SS
- Vinyl Dust Cap for Bonnet & Stem (Non-packing)
- Rolled Threads for Strength, Durability, and Ease of Use
- All Valves are Helium Leak Tested for Optimal Performance

SPECIFICATIONS

Body Material	316 Stainless Steel, Zinc-nickel Plated Carbon Steel
Pressure Rating	Hard Seat - 10,000 psi at 200°F, Soft Seat - 6,000 psi at 200°F.
Temperature Rating	Standard up to 200°F; Available up to 1,000°F. See Pressure/Temperature Charts on Page 97 for More Detailed Information.
Orifice	0.187"
Flow	Hard Seat C_V: 0.44, Soft Seat C_V: 0.76
Connections	1/2" or 3/4"

HOW TO ORDER: Choose options to build a part number. For example: G40H22S-HPBP

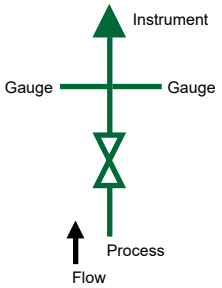

G40	H	22	S	-HPBP*
MODEL	SEAT TYPE	CONNECTION SIZE	MATERIAL	OPTIONS
G40 = Multiport Gauge Valve	**H** = Hard Seat **S** = Soft Seat	**22** = 1/2" M x (3) 1/2" F **23** = 3/4" M x (3) 1/2" F	**C** = Carbon Steel **S** = Stainless Steel **H** = Hastelloy C **M** = Monel	*Available on G40:* **-HP** = Hex Plug **-BP** = Bleed Plug **-BV** = 1/2" Bleed Valve **-P1** = PTFE Packaging *Available on G40H:* **-P2** = Grafoil Packing (316SS Body Rating 1,000°F at 1,500 psi)

** See 98 for Additional Options*

VALVES

NEEDLE VALVES

REOTEMP needle valves allow users to isolate pressure to their instrument and remove the instrument without disturbing or shutting down the system. A variety of options are available to suit just about every application.

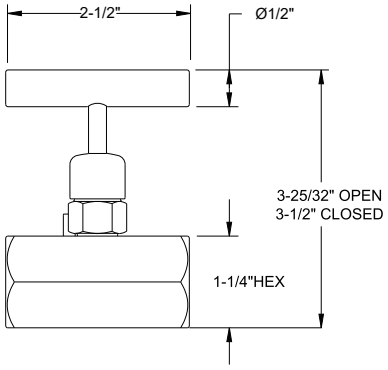

Bidirectional Flow (Soft Seat)
Unidirectional Flow (Hard Seat)

FEATURES / BENEFITS

- FKM O-ring Seal and PTFE Back-up Ring Below the Stem Threads to Protect from Corrosion and Galling; Soft Seat Comes Standard With Delrin Seat
- PTFE or Grafoil Packing Optional
- All Stems are 316SS
- Vinyl Dust Cap for Bonnet & Stem (Non-packing)
- Rolled Threads for Strength, Durability, and Ease of Use
- All Valves are Helium Leak Tested for Optimal Performance

SPECIFICATIONS

Body Material	316 Stainless Steel, Zinc-nickel Plated Carbon Steel
Pressure Rating	Hard Seat - 10,000 psi at 200°F, Soft Seat - 6,000 psi at 200°F.
Temperature Rating	Standard up to 200°F; Available up to 1,000°F. See Pressure/Temperature Charts on Page 97 for More Detailed Information.
Orifice	1/4" – 1/2"NPT: 0.187", 3/4" – 1-1/2"NPT: 0.438"
Flow	Hard Seat: 1/4" – 1/2" NPT: C_V 0.44, 3/4" – 1-1/2" NPT: C_V 2.70 Soft Seat: 1/4" – 1/2" NPT: C_V 0.76, 3/4" – 1-1/2" NPT: C_V 4.0
Connections	1/4", 3/8" 1/2", 3/4", 1", 1-1/4" & 1-1/2"

HOW TO ORDER: Choose options to build a part number. For example: N10H22S-P1NC

N10	H	22	S	-P1NC*
MODEL	**SEAT TYPE**	**CONNECTION SIZE**	**MATERIAL**	**OPTIONS**
N10 = Single Handle Needle Valve	**H** = Hard Seat **S** = Soft Seat	**44** = 1/4" MxF **4F** = 1/4" FxF **22** = 1/2" MxF **2F** = 1/2" FxF **24** = 1/4" F x 1/2" M (Soft Seat Only) **33** = 3/4" MxF **3F** = 3/4" FxF **11** = 1" MxF **1F** = 1" FxF **55** = 3/8" MxF **5F** = 3/8" FxF **66** = 1-1/4" MxF **6F** = 1-1/4" FxF **88** = 1-1/2" MxF **8F** = 1-1/2" FxF	**C** = Carbon Steel **S** = Stainless Steel **H** = Hastelloy C **M** = Monel	*Available on N10:* **-AN** = 90° Angled Body Design **-P1** = PTFE Packaging *Available on N10H:* **-P2** = Grafoil Packing (316SS Body Rating 1,000°F at 1,500 psi) **See 98 for Additional Options*

REOTEMP INSTRUMENTS

2-VALVE MANIFOLD

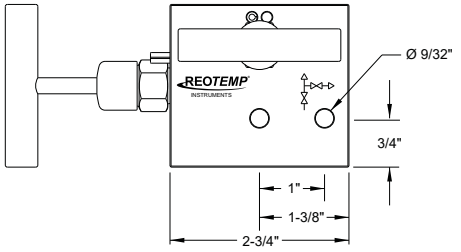

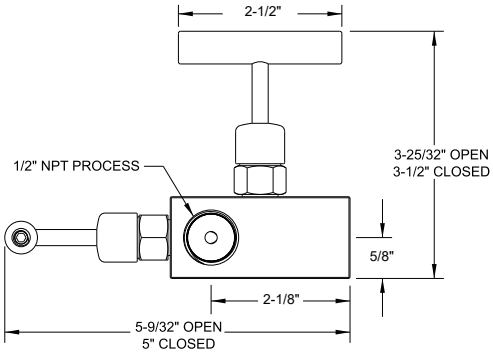

REOTEMP's 2-Valve Manifold has a variety of designs and can be used with just about any instrument. One available design has an isolation valve along with a valve controlling the 1/2" FNPT vent. A single block design is available with two isolation valves used in DP applications.

FEATURES / BENEFITS

- FKM O-ring Seal and PTFE Back-up Ring Below the Stem Threads to Protect from Corrosion and Galling; Soft Seat Comes Standard with Delrin Seat
- PTFE or Grafoil Packing Optional
- All Stems are 316SS
- Vinyl Dust Cap for Bonnet & Stem (Non-packing)
- Rolled Threads for Strength, Durability and Ease of Use
- All Valves are Helium Leak Tested for Optimal Performance

SPECIFICATIONS

Body Material	316 Stainless Steel, Zinc-nickel Plated Carbon Steel
Pressure Rating	Hard Seat - 10,000 psi at 200°F, Soft Seat - 6,000 psi at 200°F.
Temperature Rating	Standard up to 200°F; Available up to 1,000°F. See Pressure/Temperature Charts on Page 97 for More Detailed Information.
Orifice	0.187"
Flow	Hard Seat C_V: 0.44, Soft Seat C_V: 0.76
Connections	Available in block, single flange, or double flange connection for remote or direct installation

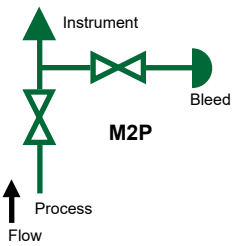

HOW TO ORDER: Choose options to build a part number. For example: M2PHNNS-M1NC

M2P	H	NN	S	-M1NC*
MODEL	**SEAT TYPE**	**CONNECTION SIZE**	**MATERIAL**	**OPTIONS**
M2P = 2-Valve Manifold Static Pressure *Other 2-Valve Manifolds Available*	**H** = Hard Seat **S** = Soft Seat	**NN** = 1/2" F x 1/2" F	**C** = Carbon Steel **S** = Stainless Steel **H** = Hastelloy C **M** = Monel	*Available on Hard & Soft Seat:* **-M1** = 2" CS Pipe Mounting Kit **-M2** = 2" SS Pipe Mounting Kit *Available on Hard Seat ONLY:* **-P2** = Grafoil Packing (316SS Body Rating 1,000°F at 1,500 psi) **See 98 for Additional Options*

VALVES

3-VALVE MANIFOLD

Flange-Flange

Female-Female

Flange-Female

REOTEMP's 3-Valve Manifold can be mounted to differential pressure gauges as well as differential transmitters. This manifold features two isolation valves and an equalizing valve.

FEATURES / BENEFITS

- FKM O-ring Seal and PTFE Back-up Ring Below the Stem Threads to Protect from Corrosion and Galling; Soft Seat Comes Standard with Delrin Seat
- PTFE or Grafoil Packing Optional
- All Stems are 316SS
- Vinyl Dust Cap for Bonnet & Stem (Non-packing)
- Rolled Threads for Strength, Durability and Ease of Use
- All Valves are Helium Leak Tested for Optimal Performance

SPECIFICATIONS

Body Material	316 Stainless Steel, Zinc-nickel Plated Carbon Steel
Pressure Rating	Hard Seat - 10,000 psi at 200°F, Soft Seat - 6,000 psi at 200°F.
Orifice	0.187"
Flow	Hard Seat C_V: 0.44, Soft Seat C_V: 0.76
Connections	Available in block, single flange, or double flange connection for remote or direct installation

HOW TO ORDER: Choose options to build a part number. For example: M30HNNS-M2NC

M30	H	NN	S	-M2NC*
MODEL	**SEAT TYPE**	**CONNECTION SIZE**	**MATERIAL**	**OPTIONS**
M30 = 3-Valve Manifold **M3M** = 3-Valve Manifold (Mini-Body)	**H** = Hard Seat **S** = Soft Seat	**NN** = 1/2" F x 1/2" F **NF** = 1/2" F x Flange **FF** = Flanged x Flanged	**C** = Carbon Steel **S** = Stainless Steel **H** = Hastelloy C **M** = Monel	*Available on M3H and M3S:* **-M1** = 2" CS Pipe Mounting Kit **-M2** = 2" SS Pipe Mounting Kit **-FC** = CS Futbol **-FS** = SS Futbol **-DC** = CS Dielectric Kit **-DS** = SS Dielectric Kit **-P1** = PTFE Packaging *Available on M3H ONLY:* **-P2** = Grafoil Packing (316SS Body Rating 1,000°F at 1,500 psi) **See 98 for Additional Options*

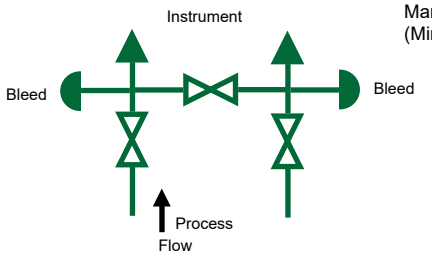

REOTEMP INSTRUMENTS

3-VALVE MANIFOLD

Visit reotemp.com

- ✓ Check Stock
- ✓ Configure Part #
- ✓ Get Price
- ✓ Download PDF Data Sheets

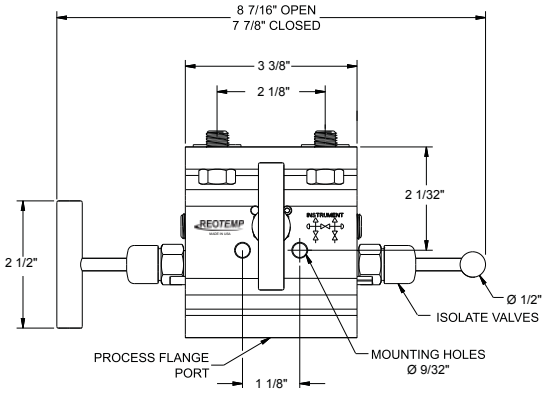

Flange-Flange (Top View)

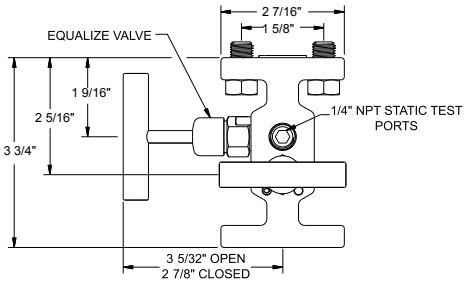

Flange-Flange (Side View)

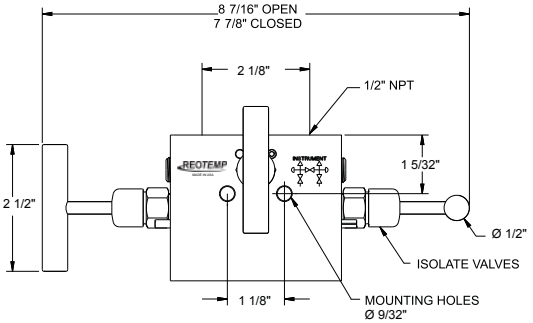

Female-Female (Top View)

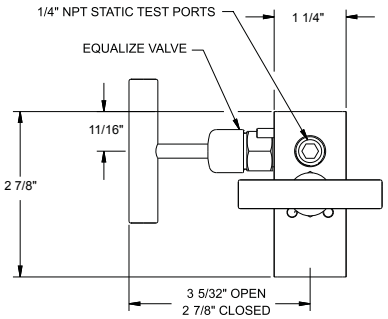

Female-Female (Side View)

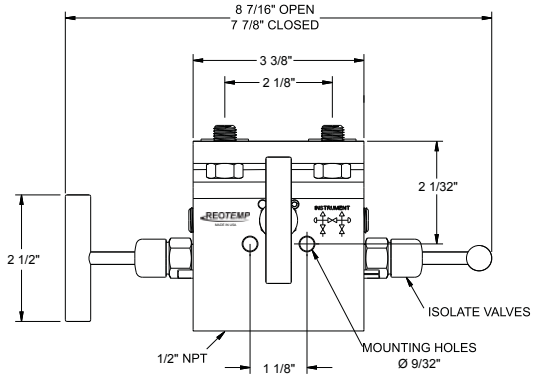

Flange-Female (Top View)

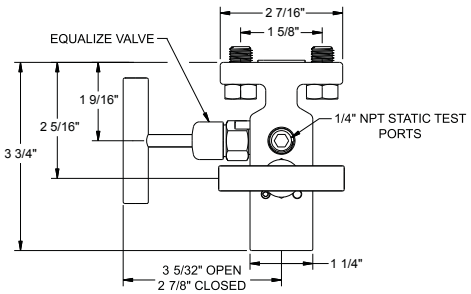

Flange-Female (Side View)

VALVES

5-VALVE MANIFOLD

Flange-Flange

Female-Female

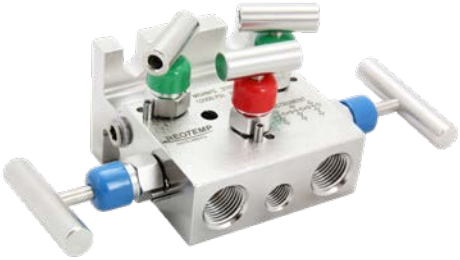

Flange-Female

REOTEMP's 5-Valve Manifold can be mounted to differential pressure gauges as well as differential transmitters. This manifold features two isolation valves, two equalizing valves, and a bleed valve.

FEATURES / BENEFITS

- FKM O-ring Seal and PTFE Back-up Ring Below the Stem Threads to Protect from Corrosion and Galling; Soft Seat Comes Standard with Delrin Seat
- PTFE or Grafoil Packing Optional
- All Stems are 316SS
- Vinyl Dust Cap for Bonnet & Stem (Non-packing)
- Rolled Threads for Strength, Durability, and Ease of Use
- All Valves are Helium Leak Tested for Optimal Performance
- Optional Angled Equalizing Valves for Ease of Use

SPECIFICATIONS

Body Material	316 Stainless Steel, Zinc-nickel Plated Carbon Steel
Pressure Rating	Hard Seat - 10,000 psi at 200°F, Soft Seat - 6,000 psi at 200°F.
Orifice	0.187"
Flow	Hard Seat C_V: 0.44, Soft Seat C_V: 0.76
Connections	Available in block, single flange, or double flange connection for remote or direct installation

HOW TO ORDER: Choose options to build a part number. For example: M50HNNS-P2NC

M50	H	NN	S	-P2NC*
MODEL	**SEAT TYPE**	**CONNECTION SIZE**	**MATERIAL**	**OPTIONS**
M50 = 5-Valve Manifold	**H** = Hard Seat **S** = Soft Seat	**NN** = 1/2" F x 1/2" F **NF** = 1/2" F x Flange **FF** = Flanged x Flanged	**C** = Carbon Steel **S** = Stainless Steel **H** = Hastelloy C **M** = Monel	*Available on M5H and M5S:* **-AV** = Angled (Flared) Valve Handles **-M1** = 2" CS Pipe Mounting Kit **-M2** = 2" SS Pipe Mounting Kit **-FC** = CS Futbol **-FS** = SS Futbol **-DC** = CS Dielectric Kit **-DS** = SS Dielectric Kit **-P1** = PTFE Packaging *Available on M5H ONLY:* **-P2** = Grafoil Packing (316SS Body Rating 1,000°F at 1,500 psi) **See 98 for Additional Options*

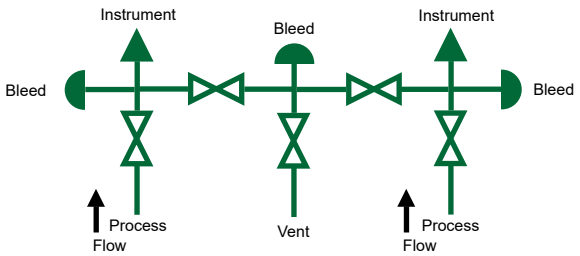

REOTEMP INSTRUMENTS

5-VALVE MANIFOLD

Visit reotemp.com

- ✓ Check Stock
- ✓ Get Price
- ✓ Configure Part #
- ✓ Download PDF Data Sheets

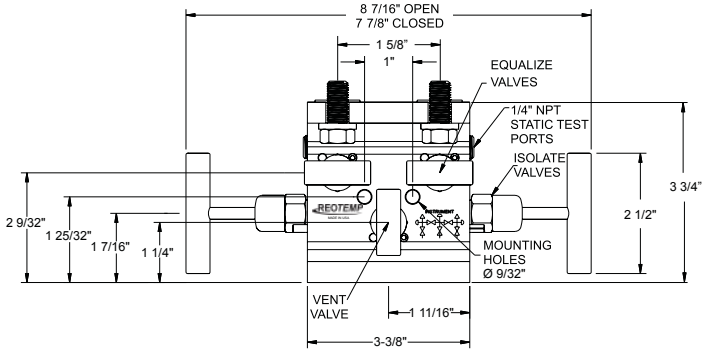

Flange-Flange (Top View)

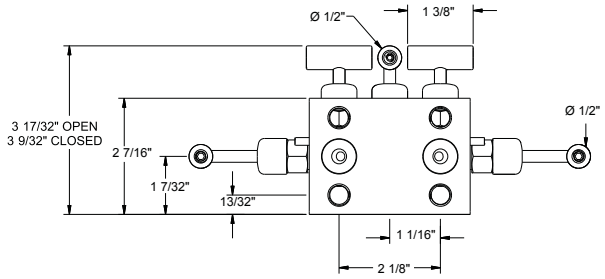

Flange-Flange (Side View)

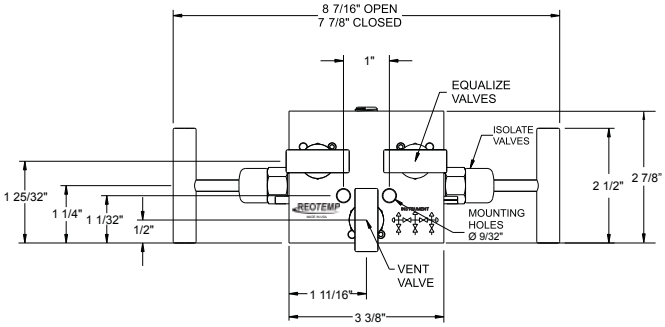

Female-Female (Top View)

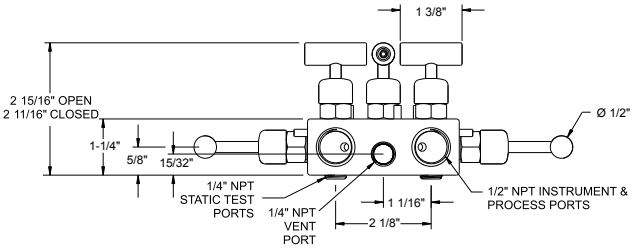

Female-Female (Side View)

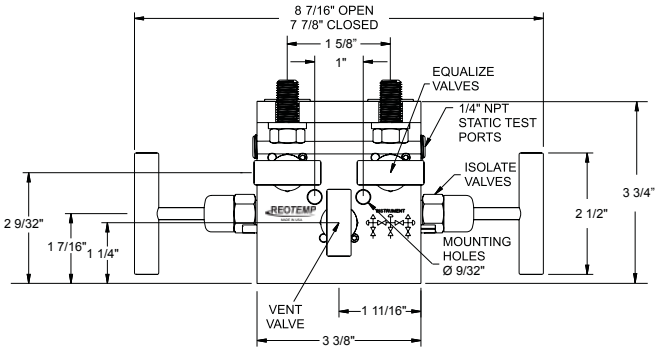

Flange-Female (Top View)

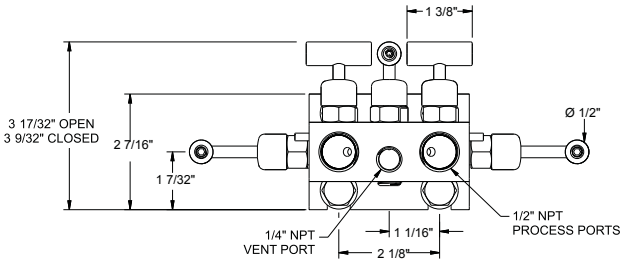

Flange-Female (Side View)

VALVES

VALVE TEMPERATURE RATING & OTHER VALVES

INSTRUMENT VALVES & MANIFOLDS PRESSURE VS. TEMPERATURE: FKM O-RING

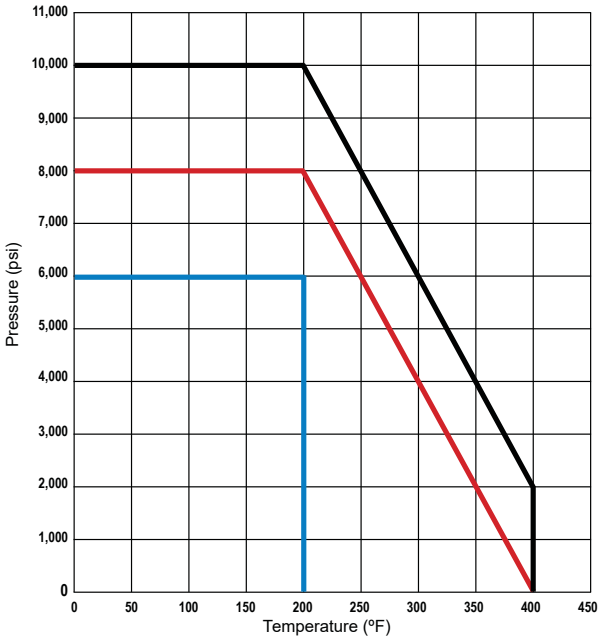

INSTRUMENT VALVES & MANIFOLDS PRESSURE VS. TEMPERATURE: GRAFOIL & PTFE PACKING

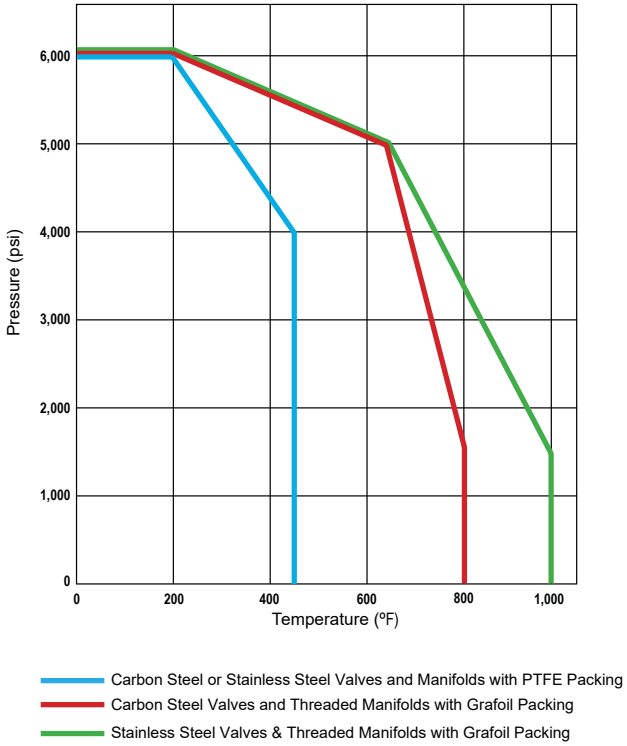

BALL VALVE

PRESSURE LIMITING VALVES

GAUGE COCK

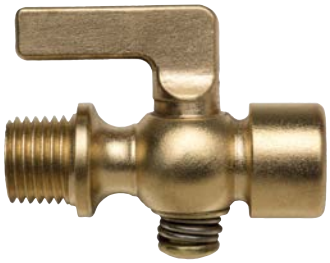

VALVE OPTIONS

Visit reotemp.com

- ✓ Check Stock
- ✓ Get Price
- ✓ Configure Part #
- ✓ Download PDF Data Sheets

		G10	G20	G30	G40	N10	M2PH	M2PS	M2LH	M2LS	M2M	M30H	M30S	M3M	M50H	M50S
PACKING/O-RINGS																
P1	PTFE Packing	✓	✓	✓	✓	✓	✓	✓	✓	✓	✓	✓	✓	✓	✓	✓
P2	Grafoil Packing	H	H	H	H	H	✓	N/A	✓	N/A	✓	✓	N/A	N/A	✓	N/A
P3	EPDM O-Ring	✓	N/A	N/A	N/A	N/A	N/A	N/A	N/A	N/A	✓	N/A	N/A	✓	N/A	N/A
P4	FFKM (Kalrez 3018) O-Ring	✓	N/A	N/A	N/A	N/A	N/A	N/A	N/A	N/A	✓	N/A	N/A	✓	N/A	N/A
P5	NBR O-Ring	✓	N/A	N/A	N/A	N/A	N/A	N/A	N/A	N/A	✓	N/A	N/A	✓	N/A	N/A
SOFT SEATS																
S1	PEEK	S	S	S	S	S	N/A	N/A	N/A	N/A	N/A	N/A	N/A	N/A	N/A	✓
S2	PCTFE	S	S	S	S	S	N/A	N/A	N/A	N/A	N/A	N/A	N/A	N/A	N/A	✓
STEM TIPS																
T1	Non-Rotating SS Stem Tip	✓	✓	✓	✓	✓	✓	✓	✓	✓	✓	✓	✓	✓	✓	✓
T5	Ball (440C Stainless) Stem Tip	H	H	H	H	H	✓	N/A	✓	N/A	N/A	✓	N/A	N/A	✓	N/A
T6	Ball (Carbide) Stem Tip	H	H	H	H	H	✓	N/A	✓	N/A	N/A	✓	N/A	N/A	✓	N/A
T7	Ball (Ceramic) Stem Tip	H	H	H	H	H	✓	N/A	✓	N/A	N/A	✓	N/A	N/A	✓	N/A
T8	Ball (Monel) Stem Tip	H	H	H	H	H	✓	N/A	✓	N/A	N/A	✓	N/A	N/A	✓	N/A
T9	Regulating Hard Stem Tip	H	H	H	H	H	✓	N/A	✓	N/A	N/A	✓	N/A	N/A	✓	N/A
MOUNTING OPTIONS																
M1	CS 2" Pipe Mounting Bracket	N/A	✓	✓	N/A	N/A	N/A	N/A	N/A	N/A	N/A	✓	✓	✓	✓	✓
M2	SS 2" Pipe Mounting Bracket	N/A	✓	✓	N/A	N/A	N/A	N/A	N/A	N/A	N/A	✓	✓	✓	✓	✓
M3	1 Nut	✓	N/A	N/A	✓	✓	N/A	N/A	N/A	N/A	N/A	N/A	N/A	N/A	N/A	N/A
M4	2 Nuts	✓	N/A	N/A	✓	✓	N/A	N/A	N/A	N/A	N/A	N/A	N/A	N/A	N/A	N/A
EXTRAS																
NC	NACE Compliance MR0175*	✓	✓	✓	✓	✓	✓	✓	✓	✓	✓	✓	✓	✓	✓	✓
OX	Cleaned for O2 Service	✓	✓	✓	✓	✓	✓	✓	✓	✓	✓	✓	✓	✓	✓	✓
IH	Internal Hydrostatic Test	✓	✓	✓	✓	✓	✓	✓	✓	✓	✓	✓	✓	✓	✓	✓
PM	Positive Material ID	✓	✓	✓	✓	✓	✓	✓	✓	✓	✓	✓	✓	✓	✓	✓
EX	Extended Body Design	N/A	✓	N/A	N/A	N/A	N/A	N/A	N/A	N/A	N/A	N/A	N/A	N/A	N/A	N/A
RV	Right Vent	N/A	✓	✓	N/A	N/A	N/A	N/A	N/A	N/A	N/A	N/A	N/A	N/A	N/A	N/A
HP	1/2" Hex Plug	N/A	N/A	N/A	✓	N/A	✓	N/A	N/A	N/A	N/A	N/A	N/A	N/A	N/A	N/A
BP	1/2" Bleed Plug	N/A	STD	STD	✓	N/A	✓	N/A	N/A	N/A	N/A	N/A	N/A	N/A	N/A	N/A
BV	1/2" Bleed Valve	N/A	N/A	N/A	✓	N/A	✓	N/A	N/A	N/A	N/A	N/A	N/A	N/A	N/A	N/A
AN	90° Angled Body Design	N/A	N/A	N/A	N/A	✓	N/A	N/A	N/A	N/A	N/A	N/A	N/A	N/A	N/A	N/A
FC	CS Futbol	N/A	N/A	N/A	N/A	N/A	✓	✓	✓	✓	✓	✓	✓	✓	✓	✓
FS	SS Futbol	N/A	N/A	N/A	N/A	N/A	✓	✓	✓	✓	✓	✓	✓	✓	✓	✓
DC	CS Dielectric Kit	N/A	N/A	N/A	N/A	N/A	✓	✓	✓	✓	✓	✓	✓	✓	✓	✓
DS	SS Dielectric Kit	N/A	N/A	N/A	N/A	N/A	✓	✓	✓	✓	✓	✓	✓	✓	✓	✓
AC	CS Static Adaptors	N/A	N/A	N/A	N/A	N/A	✓	✓	✓	✓	✓	✓	✓	✓	✓	✓
AS	SS Static Adaptors	N/A	N/A	N/A	N/A	N/A	✓	✓	✓	✓	✓	✓	✓	✓	✓	✓

*Available only on SS, Monel, & Hastelloy C-276 bodies.

REOTEMP®
INSTRUMENTS

PRESSURE TRANSMITTERS

REOTEMP Pressure Transmitters and Transducers all convert applied pressure to an electrical signal that can be interpreted by a computer or other interpretive device, where it can be used to display or control a process variable.

Output: REOTEMP transmitters produce either a 4-20 mA signal (the most common output), or a variety of voltage outputs, such as 1-5 Vdc or 0-10 Vdc (3-wire).

Sensors: Piezoresistive diffused semiconductor technology is standard for pressures up to 300 psi. For higher pressures (up to 60,000 psi), sputtered thin film technology is used. These sensors are very stable, shock resistant, and durable. Our piezoresistive and thin-film sensors are made with no epoxies or bonding agents, virtually eliminating signal instability or drift.

Unit Integrity: Sensor durability, along with mechanical integrity of the stainless case and all-welded process connection, produce a rugged instrument designed to provide consistent performance under severe industrial conditions.

Accuracy: Accuracies from 0.5% to 0.1% are available. Each unit is temperature compensated to provide stable accuracy over large ambient variations and long periods of time.

Ready-to-go: Each REOTEMP transmitter is inspected and calibrated prior to shipment to assure it is 100% “Ready-to-go,” right out of the box!

Large Transmitter Stock: REOTEMP stocks many transmitter models in a large variety of ranges. However, the most popular output is the 4-20 mA output.

Transmitter or Transducer? “Transmitter” is often used when referring to a pressure sensor with variable current (mA) output, whereas “Transducer” usually implies voltage output. For simplicity, we use the term “transmitter” for all sensors offered in this catalog.

SELECTING A TRANSMITTER

Consider the following issues to choose the best pressure transmitter for your application:

1. Special Applications

Series **TG** (general purpose transmitter) is a good choice for general industrial applications. For special applications or circumstances, other models will be more suitable:

High Accuracy	TH	Choose series **TH** for up to 0.125% accuracy (BFSL). For reference, the standard TG accuracy is 0.5%.
Hazardous Environments	TE	Series **TE** for explosion proof environments and **THX** for intrinsically safe.
Total Submersion	TL	Choose series **TL**.
Clogging Media	TG	Consider series **TG** mounted to a diaphragm seal.
Sanitary Appications	TS	Choose series **TS**, which comes with a sanitary Tri-clamp connection.
Low Cost	TM	For OEM use or for applications where low cost is a necessity, consider series **TM**.

2. Pressure Range & Overpressure

Choose a range that places your working pressure at 50% to 90% of the transmitter pressure range. After exposure to pressures up to **proof pressure**, the transmitter should return to normal operating performance within specifications. After exposure to pressures **above proof pressure, but below burst pressure**, the transmitter may be damaged and not perform to specification after return to operating range. Exposure to **pressure beyond burst pressure** may cause rupture of the transmitter.

3. Accuracy

Series **TG**, with 0.5% BFSL accuracy, and with 0.05% repeatability, suits many industrial applications. Higher accuracies (0.25% and 0.1%) are available, generally at higher cost.

What is BFSL? BFSL is "Best Fit Straight Line". It expresses maximum deviation from a straight line positioned to minimize maximum deviation.

4. Output

Current output (4 mA to 20 mA) is the most popular for industrial use. This is because this output range is less susceptible to electrical noise and can be transmitted through copper wires up to thousands of feet with little signal loss. Several voltage outputs are also available, and are suitable for shorter distances. Typical **voltage outputs** include 0-5 Vdc, 1-5 Vdc, and 0-10 Vdc.

5. Process Connection

¼" NPT and ½" NPT are the most common connections in industrial process applications. In hydraulic applications, 7/16-20 UNF SAE male with o-ring seal is commonly used. For sanitary applications, Tri-clamp connections on the **TS** series are available in several sizes, with 1-½" Tri-clamp the most common.

6. Electrical Connection

All REOTEMP transmitters require wire hookup for both power and output. 4-20 mA output uses 2 wires, which carry both loop power and output signal (loop current). Voltage output usually uses three wires, with 4 wires available. The standard Hirschmann connector (Din 43650) in standard or mini-size allows easy connection to 2, 3 or 4 wires, with internal screw terminals and cable gland. Also available are sealed integral cable (with or without ½" NPT male conduit threads), Bendix 4- and 6-pin, and M12 types, as well as a Hirschmann with ½" NPT female conduit connection.

7. Severe Conditions

REOTEMP transmitters are rugged instruments intended for industrial use. However, temperatures, corrosion, vibration, or pulsation beyond operational limits should be addressed to prolong the life of the instrument:

Problem	*Solution*
High Process Temperature	Temperature at the instrument can be lowered by using a dead-leg extension. For high temperature with clogging media, a diaphragm seal with capillary or a cooling tower can also be used.
High Ambient Temperature	The instrument can be removed from the hot zone using piping, tubing, or capillary with a diaphragm seal.
Corrosive Media	A chemically compatible diaphragm seal can isolate the transmitter form the corrosive media.
Pulsation	Pressure fluctuations in an incompressible fluid can cause damaging pulsation (such as water hammer). This is a common cause of failure in pressure transducers, and measures should be taken to avoid this condition. Use of a snubber or restrictor screw (threaded orifice) should be considered.

GENERAL PURPOSE TRANSMITTER

TG

TG with 1/2" Flush Face Diaphragm

Diaphragm Seal Compatible

FEATURES / BENEFITS

- 0.5% or 0.25% Accuracy
- All-stainless Welded Body and Wetted Parts
- 4-20 mA or Voltage Output
- Rugged, with Protection from Shock, Over-range, and Over-voltage, Internals Potted in Silicone Gel
- Internal Zero and Span Adjustments

SPECIFICATIONS

Output Signal	4-20mA, 2-wire (standard), 0-5V, 0-10V, 1-6V, or 1-11Vdc (3-wire)
Pressure Ranges	Vacuum, compound, pressure to 15,000 psi; gauge and absolute

	Proof Pressure	Burst Pressure
0/5 - 0/200 psi	3 x range	3.8 x range
0/300 - 0/10,000 psi	1.75 x range	4 x range
0/15,000 psi	1.5 x range	3 x range

Accuracy (BFSL)	±0.5% of span (standard), ±0.25% of span (optional)
Adjustment	±10% full scale, zero & span
Input	12-30 Vdc (for current output), 14-30 Vdc (for voltage output)
Temperature	Compensated: 32 to 175°F Effect: ±0.02% of span/°F Media: -22 to 212°F Ambient: -40 to 185°F
Weight	Approximately 3.5 oz
Environmental Rating	IP65

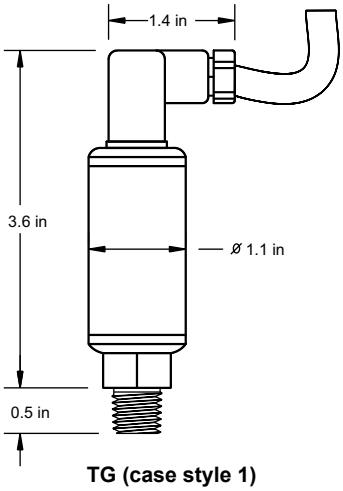

TG (case style 1)

Note: Dimensions are nominal and may vary. Check with REOTEMP sales if dimensions are critical. Other case styles available.

HOW TO ORDER: Choose options to build a part number. For example: TG1P181A4A00-TS

TG1	P18	1	A	4	A00	-TS
MODEL	**RANGE**	**ACCURACY**	**OUTPUT SIGNAL**	**PROCESS CONNECTION**	**ELECTRICAL CONNECTION**	**OPTIONS**
TG1 = General Purpose Transmitter	*See Transmitter Technical Reference on 108*	**1** = ±0.5% Full Scale **2** = ±0.25% Full Scale	**A** = 4-20mA (2-wire) (standard) **B** = 0-5Vdc (3-wire) **C** = 1-5Vdc (3-wire) **E** = 0-10Vdc (3-wire)	**4** = 1/4" NPT Male **8** = 1/8" NPT Male **F** = 1/2" NPT Male Flush Face Diaphragm Seal (60 psi Minimum)	**A00** = Mini-Hirschmann, No Cable (DIN EN 175301-803 Form C) **A??** = Mini-Hirschmann (?? = ft. of cable) **J??** = 1/2" NPT Conduit (?? = ft. of cable) ***E00** = 4-pin Bendix ***F00** = 6-pin Bendix ***M00** = M12 x 1 (4-pin) *Mating connector sold separately.	**-RS** = Threaded Restrictor screw **-TS** = Stainless Steel Tag (1-10 Characters) *Optional Assembly to Diaphragm Seal Available*

TRANSMITTERS

REOTEMP INSTRUMENTS

COMPACT OEM TRANSMITTER

TM

TM with Mini-Hirschmann

CE RoHS compliant

FEATURES / BENEFITS

- Reliable, Economical
- 0.5% Accuracy
- 4-20 mA or Voltage Output
- Shock Resistant, High Over-range Protection
- All-stainless Body and Wetted Parts

SPECIFICATIONS

Output Signal	4-20mA, 2-wire (standard), 0-10Vdc (3-wire)
Pressure Ranges	Vacuum, compound, pressure to 15,000 psi

	Proof Pressure	Burst Pressure
0/5 - 0/200 psi	3 x range	3.8 x range
0/300 - 0/10,000 psi	1.75 x range	2.6 x range
0/15,000 psi	1.5 x range	3 x range

Accuracy (BFSL)	±0.5% of span (standard), includes repeatability, hysteresis and linearity
Input	10-30Vdc (for current output) 14-30Vdc (for voltage output)
Temperature	Compensated: 32 to 175°F Effect: ±0.02% of span/°F (on zero and span) Media: -22 to 212°F (-30/100°C) Ambient: -22 to 175°F (-30/80°C)
Weight	Approximately 2.8 oz
Environmental Rating	IP65

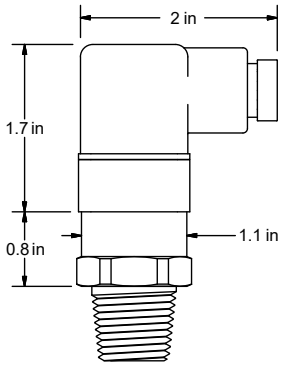

TM with Hirschmann

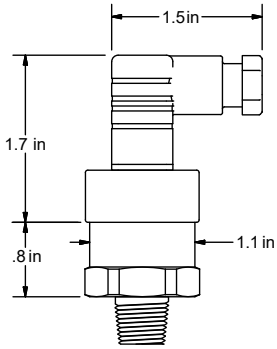

TM with Mini-Hirschmann

Note: Dimensions are nominal and may vary. Check with REOTEMP sales if dimensions are critical. Other case styles available. 1/4" NPT Male connection is standard, other connections available.

TRANSMITTERS

HOW TO ORDER: Choose options to build a part number. For example: TM1P181A4B00P-TS

TM1	P18	1	A	4	B00	P	-TS
MODEL	RANGE	ACCURACY	OUTPUT SIGNAL	PROCESS CONNECTION	ELECTRICAL CONNECTION	DISPLAY	OPTIONS
TM = Compact OEM Transmitter	*See Transmitter Technical Reference on 108*	**1** = ±0.5% Full Scale	**A** = 4-20mA (2-wire) (standard) **B** = 1-5Vdc (3-wire) **C** = 1-6Vdc (3-wire) **E** = 0-10Vdc (3-wire)	**4** = 1/4" NPT Male (Standard) **2** = 1/2" NPT Male	**B00** = Hirschmann, No Cable (DIN EN 175301-803 Form A) **B??** = Hirschmann (?? = ft. of cable) **A00** = Mini-Hirschmann, No Cable (DIN EN 175301-803 Form C) **A??** = Mini-Hirschmann, No Cable (?? = ft. of cable) ***M00** = M12 x 1 (4-pin) *Mating connector sold separately.	**P** = Digital Display (Hirschmann connection and 4-20 output required) **X** = No Display	**-RS** = Threaded Restrictor Screw **-TS** = Stainless Steel Tag (1-10 Characters)

EXPLOSION PROOF TRANSMITTER

TE

FEATURES / BENEFITS

- ±0.25% Full-scale (BFSL) Accuracy
- All 316SS Welded Body and Elgiloy
- 4-20 mA or Low Power Voltage Outputs
- Rugged, with Protection from Shock, Over-range, and Over-voltage, Internals Potted in Silicone Gel

SPECIFICATIONS

Output Signal	4-20mA, 2-wire (standard), 1-5Vdc
Pressure Ranges	Vacuum, compound, pressure 0/15 psi to 0/15,000 psi

	Proof Pressure	Burst Pressure
0/5 - 0/200 psi	3 x range	3.8 x range
0/300 - 0/10,000 psi	1.75 x range	4 x range
0/15,000 psi	1.5 x range	3 x range

Accuracy (BFSL)	±0.25% of span
Input	10-30Vdc for 4-20mA; 6-30Vdc for low power voltage output (≤ 2mA for power supply ≤ 12Vdc)
Temperature	Compensated: 32 to 176°F Effect: ±0.011% FS/°F Media and Ambient: -25 to 212°F (-58 to 221°F optional)
Weight	Approximately 12 oz with 6' of cable
Environmental Rating	IP67
Hazardous Approvals	FM and CSA approved: Explosion-proof with entity approve for : Class I, Division 1, Groups A, B, C and D. Dust Ignition-proof with entity approval for class II/III, Division 1, Groups E, F and G. Maximum electrical ratings 30V, 20 mA. CE compliant with pressure equipment directive 97/23EC.

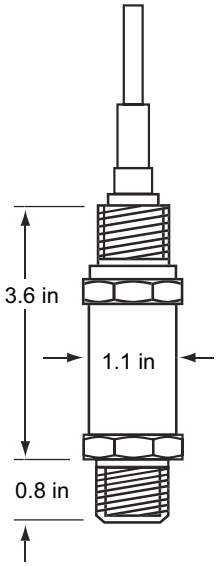

TE

Note: Dimensions are nominal and may vary. Check with REOTEMP sales if dimensions are critical. Other case styles available.

TRANSMITTERS

HOW TO ORDER: Choose options to build a part number. For example: TE1P212A2J06-TS

TE	1	P21	2	A	2	J06	-TS
MODEL	**APPROVAL**	**RANGE**	**ACCURACY**	**OUTPUT SIGNAL**	**PROCESS CONNECTION**	**ELECTRICAL CONNECTION**	**OPTIONS**
TE = Explosion Proof Industrial Transmitter	**1** = FM & CSA	*See Transmitter Technical Reference on 108*	**2** = ±0.25% Full Scale	**A** = 4-20mA (2-wire) (standard) **B** = 0-5Vdc (3-wire) **C** = 1-5Vdc low power (3-wire) **E**= 0-10Vdc (3-wire)	**2** = 1/2" NPT Male **4** = 1/4" NPT Male	**J06** = 1/2" NPT Conduit (6' cable) **J??** = 1/2" NPT Conduit (?? = ft. of cable)	**-RS** = Threaded Restrictor Screw **-TS** = Stainless Steel Tag (1-10 Characters) **-NC** = NACE Compliance

REOTEMP INSTRUMENTS

HEAVY DUTY INDUSTRIAL TRANSMITTER

TH1

TH1 with Piggyback Display

Diaphragm Seal Compatible

FEATURES / BENEFITS

- 0.25% or 0.12% Accuracy
- All-stainless Welded Body and Wetted Parts
- Very Large Pressure Range
- Engineered for High Stability, Shock Resistance, and Durability
- Internal Zero and Span Adjustments

SPECIFICATIONS

Output Signal	4-20mA, 2-wire (standard), 0-5Vdc or 1-10Vdc (3-wire)
Pressure Ranges	Vacuum, compound, pressure to 60,000 psi; gauge and absolute

	Proof Pressure	Burst Pressure
0/2 - 0/200 psi	3 x range	3.8 x range
0/300 - 0/10,000 psi	1.75 x range	4 x range
0/15,000 psi	1.5 x range	3 x range

Accuracy (BFSL)	±0.25% of span (standard), ±0.125% of span (optional)
Adjustment	±10% full scale, zero & span
Input	10-30 Vdc (for current output), 14-30 Vdc (for voltage output)
Temperature	Compensated: 32 to 175°F Effect: ±0.01% of span/°F (on zero and span) Media: -20 to 200°F Ambient: -15 to 185°F
Weight	Approximately 7 oz
Environmental Rating	IP65

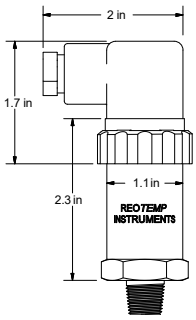

TH1

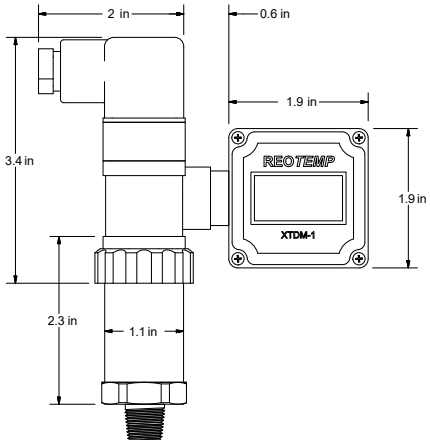

TH1 with Digital Display

Note: Dimensions are nominal and may vary. Check with REOTEMP sales if dimensions are critical. Other case styles available. 1/2" NPT Male is standard connection, other connections available.

TRANSMITTERS

HOW TO ORDER: Choose options to build a part number. For example: TH1P142A4B00P-TS

TH1	P14	2	A	4	B00	P	-TS
MODEL	RANGE	ACCURACY	OUTPUT SIGNAL	PROCESS CONNECTION	ELECTRICAL CONNECTION	DISPLAY	OPTIONS
TH1 = High-Accuracy Transmitter, CE Compliant **THX** = Intrinsically Safe, CE Compliant, FM & CSA Approved	*See Transmitter Technical Reference on 108*	**2** = ±0.25% Full Scale **3** = ±0.125% Full Scale	*Both Models* **A** = 4-20mA (2-wire) (standard) *TH1 ONLY* **B** = 0-5Vdc (3-wire) **C** = 1-5Vdc (3-wire) **E** = 0-10Vdc (3-wire)	**2** = 1/2" NPT Male (Standard) **4** = 1/4" NPT Male **F** = 1/2" NPT Male Flush Face Diaphragm Seal (60 psi Minimum) **9** = 9/16-18 UNF 2B Pressure Cone (Equal to F250C Autoclave)	**B00** = Hirschmann, No Cable (DIN EN 175301-803 Form A) **B??** = Hirschmann (?? = ft. of cable) **J??** = 1/2" NPT Conduit (?? = ft. of cable) ***F00** = 6-pin Bendix ***M00** = M12 x 1 (4-pin) **N00** = 1/2" FNPT ISO Flex Conduit *Mating connector sold separately.	**P** = Digital Display (Hirschmann connection and 4-20 output required) **X** = No Display	**-RS** = Threaded Restrictor Screw **-TS** = Stainless Steel Tag (1-10 Characters) *Optional Assembly to Diaphragm Seal Available*

SANITARY PRESSURE TRANSMITTER

TSB

Certified

FEATURES / BENEFITS

- 3-A, Tri-Clamp® Sanitary Connection
- 316 Stainless Wetted parts
- Designed for “Clean-in-place” and “Sterilize-in-place” Procedures
- Media Temperatures Up to 750°F
- Internal Zero & Span Adjustments

SPECIFICATIONS

Output Signal	4-20mA, 2-wire (standard), 1-5Vdc, 1-6Vdc, or 1-11Vdc (3-wire)
Pressure Ranges	Vacuum, compound, pressure 0/2 to 0/1000 PSI gauge and absolute. Ranges 60 psi and below not recommended with 3/4” Tri-Clamp.

	Proof Pressure	Burst Pressure
0/5 - 0/200 psi	3 x range	3.8 x range
0/300 - 0/1,000 psi	1.75 x range	4 x range

Accuracy (BFSL)	±1.0% of span, ±0.5% of span, or ±0.25% of span
Adjustment	±5% full scale, zero & span
Input	10-30 Vdc (for current output), 14-30 Vdc (for voltage output)
Temperature	Temperature effect with 1.5” or 2” Tri-Clamp: ±0.1% of span/10°F (for zero and span) or ±0.02 psi/10°F (greater of) Note: 3/4” tri-clamp not recommended for temperature variations. Effect is ≤ ±0.9 psi/10°F

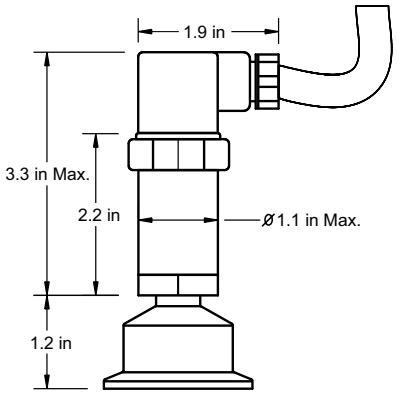

TSA

TRANSMITTERS

Tri-Clamp® is a registered trademark of Alpha Laval Inc.

REOTEMP® INSTRUMENTS

SANITARY PRESSURE TRANSMITTER

Visit reotemp.com

- ✓ Check Stock
- ✓ Configure Part #
- ✓ Get Price
- ✓ Download PDF Data Sheets

HOW TO ORDER: Choose options to build a part number. For example: TSAP18ATC75A03-DWD-AG-PM

TSA	P18	A	TC	75	A03
MODEL	**RANGE**	**OUTPUT SIGNAL**	**CONNECTION TYPE**	**TRI-CLAMP® SIZE**	**ELECTRICAL CONNECTION**
TSA = General Purpose Sanitary Transmitter (1% Accuracy) **TSB** = Industrial Sanitary Transmitter (0.5% Accuracy) **TSC** = High-Accuracy Sanitary Transmitter (0.25% Accuracy)	*Common Ranges* **P01** = -30inHg-0 psi **P03** = -30inHg-0-30 psi **P16** = 0-30 psi **P18** = 0-100 psi **P20** = 0-200 psi **P21** = 0-300 psi *Available Ranges* ■ Vac to 1,000 psi ■ Gauge Pressure, Vacuum, or Compound ■ Lowest Pressure = 2 psi *See Transmitter Technical Reference on 108 for Complete Range Guide*	**A** = 4-20mA (2-wire) (standard) **B** = 0-5Vdc (3-wire) **C** = 1-5Vdc (3-wire) **E** = 0-10Vdc (3-wire)	**TC** = Tri-Clamp **CI** = I-Line	*TSA Model* **75** = 3/4" Tri-Clamp **15** = 1.5" Tri-Clamp **20** = 2" Tri-Clamp *TSB & TSC Models* **15** = 1.5" Tri-Clamp **20** = 2" Tri-Clamp **25** = 2.5" Tri-Clamp **30** = 3" Tri-Clamp	*TSA & TSB Model ONLY* **A00** = Mini-Hirschmann (No Cable) **A??** = Mini-Hirschmann (?? = ft. of cable) **M00** = M12 x 1 (4-pin) **B00** = Hirschmann, No Cable (DIN EN 175301-803 Form A) **B??** = Hirschmann (?? = ft. of cable) *TSC Model ONLY* **J??** = 1/2" NPT Conduit (?? = ft. of cable) **M00** = M12 x 1 (4-pin)

-DWD	-AG	-PM
MOUNTING	**FILL FLUID**	**OPTIONS**
-DWD = Direct Mount, Welded **-RTR** = 6" Cooling Tower **-STW** = 3" Cooling Standoff **-W??** = PVC Coated SS Armored Capillary, Welded Note: ?? = Length in feet (e.g. 05 = 5 feet)	**-AG** = Glycerin USP **-BN** = Neobee M20 **-AS** = Silicone DC200 **-BS** = Food-grade Silicone *See 58 for Complete Fill Guide*	**-PD** = 4-Digit LCD Digital Display, (Model TSC Only) **-TS** = Stainless Steel Tag **-PM** = Positive Material Identification Certification

Optional Digital Display Available (-PD)

Diaphragm Seal Suitability Guide

Total Span* (in psi)

	Tri-Clamp	2	3	5	10	15	30	60	100	150+
TSA	3/4"	X	X	X	S	S	S	T	T	
	1.5"	X	X	T	T					
	2"	X	X							
TSB	1.5"	X	X	T	T	T	T			
	2"	X	X	T	T					
	2.5"	X	X	T						
	3"	X	X							
TSC	1.5"	S	S	S	T	T				
	2"	S	T	T						
	2.5"	T	T							
	3"	T								

*Total gauge span is additive of negative and positive pressures. Example: -15 - 0 - 30 psi = 45 psi span

- (green) Assembly will function correctly with minimal accuracy degradation.
- T — Assembly will function correctly given stable process temperature.
- S — Assembly is highly sensitive to orientation and temperature variance. REOTEMP cannot guarantee a stated accuracy.
- X — Assembly not offered.

TRANSMITTERS

SUBMERSIBLE LEVEL TRANSMITTER

TL1

FEATURES / BENEFITS

- Accurate Level Measurements from 5” WC to 300 psi
- 316SS and Polyurethane Wetted Parts
- ±0.25% or ±0.125% Accuracy
- Vented, Strong Submersible Cable
- Lightning, Short Circuit, and Reverse Polarity Protection
- NEMA 6/IP68 Protection, Submersible to 1,000 ft.

SPECIFICATIONS

Output Signal	4-20mA, 2-wire 0-5Vdc, 0-10Vdc, or 0.5-2.5Vdc (3-wire)
Pressure Ranges	0-2 psi through 0-500 psi
Proof Pressure	2x Range
Burst Pressure	4x Range
Accuracy (BFSL)	±0.25% of span (standard) ±0.125% of span (standard)
Input	12-30Vdc (for current output) 14-30Vdc (for Vdc output) 6Vdc (for 0.05-2.5Vdc output)
Temperature	Compensated: 32 to 122°F Effect: ±0.01% of span/°F (on zero and span) Media: -14 to 175°F
Environmental Rating	NEMA 6, IP68 (submersible to 1,000 ft.)
Electrical Protection	Reverse polarity, short circuit, and lightning protection
Subersible Cable	Vented, watertight, polyurethane jacketed, tensile strength: maximum 220 lbs.
Wetted Parts	316 SS, Cable: Polyurethane (teflon available), Nose Cone: Polyamide

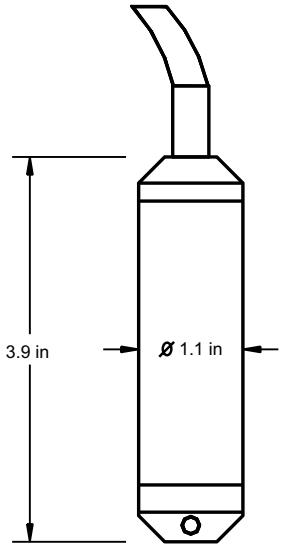

TL1 (case style 1)

Note: Dimensions are nominal and may vary. Check with REOTEMP sales if dimensions are critical. Other case styles available.

HOW TO ORDER: Choose options to build a part number. For example: TL1IN502AGP200LP

TL1	IN50	2	A	G	P200	LP
MODEL	**RANGE**	**ACCURACY**	**OUTPUT SIGNAL**	**PROCESS CONNECTION**	**CABLE**	**OPTIONS**
TL1 = General Protection **TLA** = Intrinsically Safe, FM Compliant & CSA Approved	*Special INWC ranges for TL1:* **IN50** = 0/50 **IN100** = 0/100 **IN150** = 0/150 **IN200** = 0/200 **IN400** = 0/400 *See Transmitter Technical Reference on 108*	**2** = ±0.25% Full Scale (standard) **3** = ±0.125% Full Scale	*Both Models* **A** = 4-20mA (2-wire) (standard) *TL1 ONLY* **B** = 0-5Vdc (3-wire) **E** = 0-10Vdc (3-wire) **H** = 0.5-2.5Vdc (3-wire)	**N** = Standard Nose Cone **W** = Weighted Nose Cone **G** = 2” Flush Diaphragm with Protective Cage **2** = 1/2” Male NPT Adapter	**P???** = PUR Cable (??? = Length in .ft) **F???** = FEP Cable (??? = Length in .ft)	*TL1 ONLY* **LP** = Lightning Protection

TRANSMITTER TECHNICAL REFERENCE

SPECIFICATIONS

Wetted Parts: Body: 316 SS for ranges under 400 psi, high pressure ranges 17-4PH SS diaphragm and 300 series SS pressure chamber.
Repeatability: 0.05% of scale (model TM, 0.2%)
Hysteresis: 0.1% full-scale
Stability: 0.2% full-scale (model TM, 0.5%)
Burst Pressure: 4 x range
Response Time: <1 ms (between 10-90% of scale), Model TM: <5ms
Operating Life: 100 million cycles
Electromagnetic Rating: CE compliant to EMC norm, EN61326:1997/A1:1998, RFI, EMI and ESD protection
Electrical Protection: Reverse Polarity, over voltage, and short circuit protection
SHOCK: Less than ± 0.05% full-scale effect for 1,000 g's @ 2ms on any axis (model TM: 600 g's)
Vibration: Less than ± 0.01% full scale effect for 15 g's @ 0-2,000 Hz on any axis (model TG: less than 0.05% full scale effect for 20 g's @ 5-2,000 Hz on any axis.)
Temperature Range for Storage: -40-212°F
Environmental Protection: NEMA 4x (IP65), Series TL: NEMA 6, IP68
Proof Pressure: At Proof Pressure, zero and span may shift but no permanent damage has occurred.
Burst Pressure: At Burst Pressure, permanent non-recoverable damage may occur.

WIRING DIAGRAMS

4-20 mA, 2 Wire System

Cable Leads

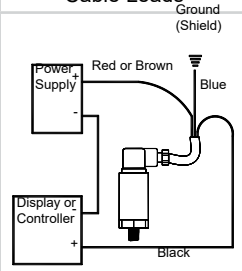

DIN Connector

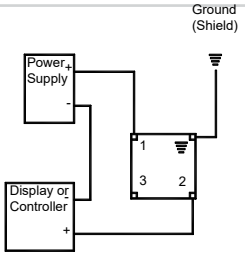

Voltage Output, 3 Wire System

Cable Leads

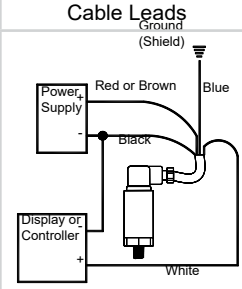

DIN Connector

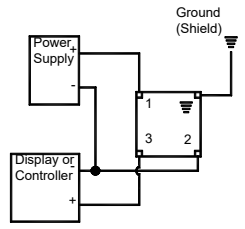

SERIES		TSA	TSB	TSC	TG1	TM	TE	TH1	THX	TL1
Code	Range	VACUUM								
P01	-30"Hg VAC	✓	✓	✓	✓	✓	✓	✓	✓	
Code	Range	COMPOUND RANGES								
P02	-30"Hg/0/15psi	✓	✓	✓	✓			✓	✓	
P03	-30/0/30 psi	✓	✓	✓	✓		✓	✓		
P04	-30/0/60 psi	✓	✓	✓	✓					
P05	-30/0/100 psi	✓	✓	✓	✓		✓			
P06	-30/0/150 psi	✓	✓	✓	✓				✓	
P07	-30/0/200 psi						✓			
P08	-30/0/300 psi	✓	✓	✓	✓					
Code	Range	PRESSURE RANGES								
IN50	0/50 inH_2O							✓		✓
IN100	0/100 inH_2O				✓			✓		✓
IN200	0/200 inH_2O									✓
L11	0/55 INWC			✓				✓		
L12	0/80 INWC			✓				✓		
L13	0/140 INWC	✓	✓	✓	✓			✓		
L14	0/280 INWC	✓	✓	✓	✓			✓		
P11	0/2 psi			✓				✓	✓	✓
P12	0/3 psi			✓				✓	✓	✓
P13	0/5 psi	✓	✓	✓	✓			✓	✓	✓
P14	0/10 psi	✓	✓	✓	✓			✓	✓	✓
P15	0/15 psi	✓	✓	✓	✓	✓	✓	✓	✓	✓
P16	0/30 psi	✓	✓	✓	✓	✓	✓	✓	✓	✓
P17	0/60 psi	✓	✓	✓	✓	✓	✓	✓	✓	✓
P18	0/100 psi	✓	✓	✓	✓	✓	✓	✓	✓	✓
P195	0/150 psi	✓	✓	✓	✓	✓		✓	✓	✓
P20	0/200 psi	✓	✓	✓	✓	✓	✓	✓	✓	✓
P21	0/300 psi	✓	✓	✓	✓	✓	✓	✓	✓	✓
P26	0/500 psi	✓	✓	✓	✓	✓	✓	✓	✓	✓
P23	0/600 psi	✓	✓	✓	✓	✓		✓		
P27	0/750 psi	✓	✓	✓	✓	✓	✓	✓	✓	✓
P25	0/1000 psi	✓	✓	✓	✓	✓	✓	✓	✓	✓
P30	0/1500 psi				✓	✓		✓		
P31	0/2000 psi				✓	✓	✓	✓		
P32	0/3000 psi				✓	✓	✓	✓		
P34	0/5000 psi				✓	✓	✓	✓	✓	
P35	0/6000 psi				✓	✓	✓	✓		
P28	0/7500 psi				✓	✓		✓	✓	
P37	0/10000 psi				✓	✓	✓	✓	✓	
P38	0/15000 psi				✓	✓	✓	✓	✓	
P39	0/20000 psi							✓		
P40	0/30000 psi							✓		
P41	0/40000 psi							✓		
P42	0/50000 psi							✓		
P43	0/60000 psi							✓		
Code	Range	ABSOLUTE RANGES								
A15	0/15 psia	✓	✓		✓					
A16	0/30 psia	✓	✓		✓					
A17	0/60 psia	✓	✓		✓					
A18	0/100 psia	✓	✓		✓					
A19	0/150 psia	✓	✓		✓					
A20	0/200 psia	✓	✓		✓					
A21	0/300 psia	✓	✓		✓					

Don't See the Range You Need? Other ranges may be available, contact REOTEMP customer service for more information.

MECHANICAL PRESSURE SWITCH

PS

REOTEMP's Mechanical Pressure Switches are suited for a variety of process applications where electrical devices must be turned on or off, in response to changing process pressure.

Diaphragm Seal Compatible

SPECIFICATIONS

Switching Elements	SPDT or DPDT
Current Capacity	15A at 250VAC; 5A at 30VAC
Housing	NEMA4, 4X, or Explosion Proof (Class. 1, Group C&D; Class. 2, Group E,F,G, Division 1,2)
Electrical Outlet	3/4" NPTF
Adjustable Setpoints	From full vacuum to 550 psi.
Wetted Diaphragm	Teflon/Buna, 316SS/Viton.
Wetted Pressure Points	316SS, Aluminum, Cast Iron
Overrange	200 psi to 1,500 psi
Warranty	3 years

Note: Specifications are for standard switches shown on next page. A wide variety of alternative housings, ranges, switches, wetted parts and options are available.

FEATURES / BENEFITS

- Reliable Piston-Actuated, Force Balanced Construction
- Rugged, High Cycle Rate Tolerance
- Precise Resolution of Set Points
- Field-adjustable Set Points
- Simple Installation Requiring no Special Tools
- Long Service Life - no Required Periodic Service, no Spare Parts Required
- UL, CSA Certified Switching Elements

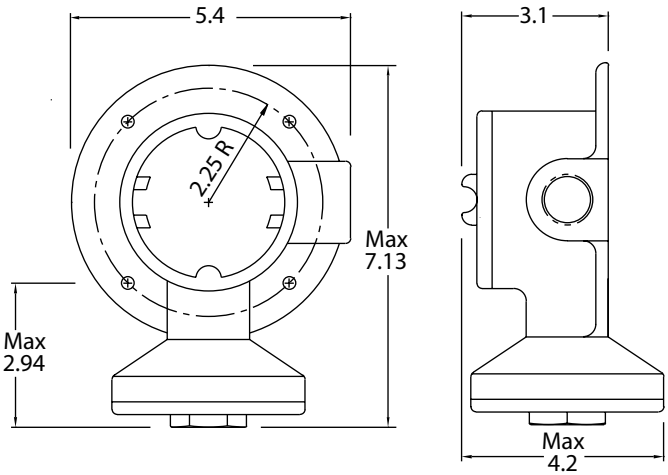

Explosion Proof Case

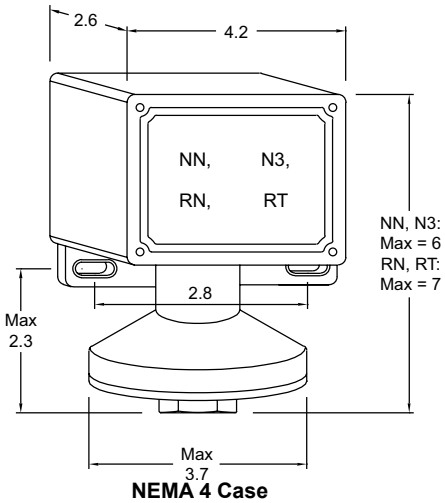

NEMA 4 Case

TRANSMITTERS

REOTEMP® INSTRUMENTS

MECHANICAL PRESSURE SWITCH

HOW TO ORDER: Choose options to build a part number. For example: PS1264N3KM4C1-YY

PS1264 | **N3** | **K** | **M4**

PRESSURE RANGE (SET POINT MUST BE WITHIN RANGE)

Overrange	Proof	Code	Range	Typical Dead Band (At Midpoint)
Pressure				
200 psi	400 psi	PS1264	2.5-45 INWC	0.8 INWC
		PS1220	0.4-2 psi	0.1 psi
		PS1250	0.75-12 psi	0.1 psi
750 psi	1000 psi	PS0440	2-25 psi	0.3 psi
		PS0450	3-50 psi	0.4 psi
1500 psi	2500 psi	PS0630	12-100 psi	0.9 psi
		PS0650	20-180 psi	1.4 psi
		PS0530	25-240 psi	2.2 psi
		PS0545	45-550 psi	3.9 psi
Vacuum				
750 psi	1000 psi	PS5418	-30" Hg	0.5 Hg
Compound				
200 psi	400 psi	PS5217	-40/0/40 INWC	1.1 INWC
1500 psi	2500 psi	PS5626	-30 Hg/0/10 psi	1" Hg/.5 psi
		PS5636	-30 Hg/0/80 psi	1.4" Hg/.7 psi

HOUSING

Weather Tight NEMA 4, 4X, IP65
NN = Aluminum, One Outlet (R)
N3 = Aluminum, Two Outlets (L+R)
RN = Aluminum, with 6-place Terminal Block, One Outlet (R)
RT = 316SS, with 6-place Terminal Block, One Outlet (R)

Explosion Proof (Class 1, Group C&D; Class II, Group E,F&G, Division. 1,2
L = Cast Iron, One Outlet (R), Housing is Weather Tight with CG Option (If selecting the KK switch, select housing code **LC, LC** Housing is Copper-free aluminum.)

SWITCH

Switches are 15A@250VAC, 5A@30vDC
K = Single (SPDT)
KK = Dual (DPDT), 6x Dead Band Multiplier

DIAPHRAGM

N4 = Teflon Coated Polyamide with Buna O-ring
M4 = 316SS with Viton O-ring (Required with 56- ranges)

Wetted

C1 | **-YY**

PRESSURE PORT

316SS
C1 = 1/4" NPTF
C2 = 1/2" NPTF

Sanitary 3A Tri-Clamp, Max. 600 psi with Standard Clamp
C8 = 1 1/2" Tri-Clamp (Ranges 05-, 06-, 56-)
C9 = 2" Tri-Clamp (Ranges 04-, 05-, 06-, 54-, 56-)

Aluminum (Available on ranges beginning: 12, 04, 52, 54)
B1 = 1/4" NPTF
B2 = 1/2" NPTF

Cast Iron (Available on ranges beginning 06, 05, 56)
F1 = 1/4" NPTF
F2 = 1/2" NPTF

Wetted

OPTIONS

-MM = Vacuum Protector Plate (Standard with Vacuum + Compound Range)
-CG = Cemented Cover Gasket
-YY = Exterior Epoxy Coating
-TS = Stainless Steel Tag (1-10 Characters)
-SP = Specify Set Point (Set by Factory, N/C)
Example: SP 50A = 50 psi Ascending. If set point is not specified, factory will set at mid point.

COOLING TOWERS

REOTEMP Cooling Towers protect pressure instruments from extremely hot process media without the pain and hassle of remote mounting the instrument. It is specifically designed to mount above a diaphragm seal or thread directly into the process. REOTEMP's unique design can reduce the process temperature by up to 600°F!

RTR2F2M

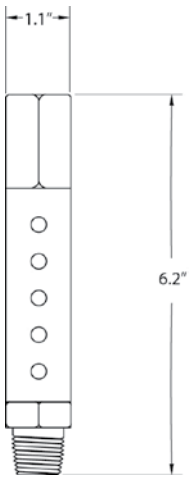

STW2F2M

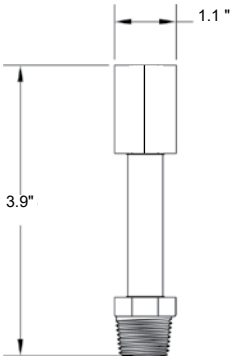

SPECIFICATIONS

- Protects Pressure Instruments from High Process Temperatures
- Reduces Temperature while Maintaining a Direct Mount
- Fully Welded, 316 Stainless Steel Construction

Application Notes

- Cooling towers may be threaded directly into process media in applications where the fluid viscosity is low enough to flow through a 3mm ID tube without clogging. For best performance, mount a cooling tower above a diaphragm seal.
- If mounting between a pressure instrument and diaphragm seal, use a 3-digit mounting code in the diaphragm seal part number (pg.57)
- Pigtail siphons (pg.113) or diaphragm seals should be used for steam service.

Performance of Cooling Elements

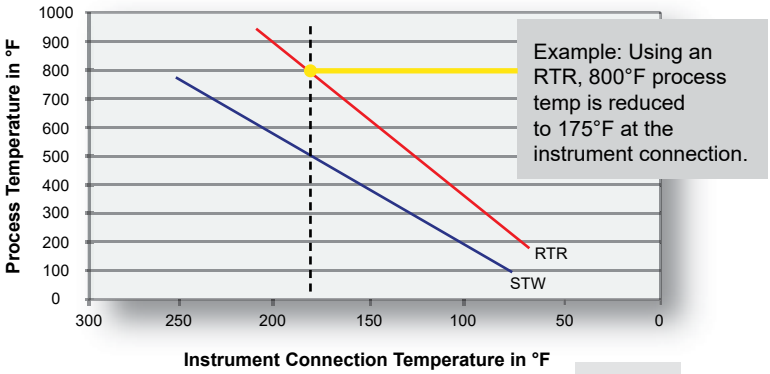

Note: at 70°F ambient temperatures. Actual temperature performance will vary based on the process application.

HOW TO ORDER: Choose options to build a part number. For example: STW4M4M

STW	4M	4M
MODEL	INSTRUMENT CONNECTION	PROCESS CONNECTION
RTR = Cooling Tower **STW** = Cooling Standoff	**4M** = 1/4" Male NPT **4F** = 1/4" Female NPT **2M** = 1/2" Male NPT **2F** = 1/2" Female NPT	**4M** = 1/4" Male NPT **2M** = 1/2" Male NPT

	Temperature °F	RTR psi	STW psi
Maximum Working Pressure	200	5000	5000
	500	3500	3500
	800	1000	1500

Maximum working temperature is 800°F.

SNUBBERS

REOTEMP snubbers are a simple cost-effective solution for harmful pressure surges and pulsation. When a REOTEMP snubber is installed, it absorbs pulsation and surges. This protects your instrumentation and stabilizes the pointer for easier readings. Snubbers are available in either an adjustable self-cleaning piston design or an economical porous disk design.

POROUS DISK TYPE				
Max. PSI	NPT	Porosity	Material	Part #
5,000	1/4”	Liquid	Brass	PXS-722BE
		Gas		PXS-722BG
	1/2”	Liquid		PXS-723BE
		Gas		PXS-723BG
15,000	1/4”	Liquid	303SS	PXS-722SE
		Gas		PXS-722SG
	1/2”	Liquid		PXS-723SE
		Gas		PXS-723SG

- The Economical Choice for Non-clogging Applications
- Multiple Porosities Available for Various Viscocities

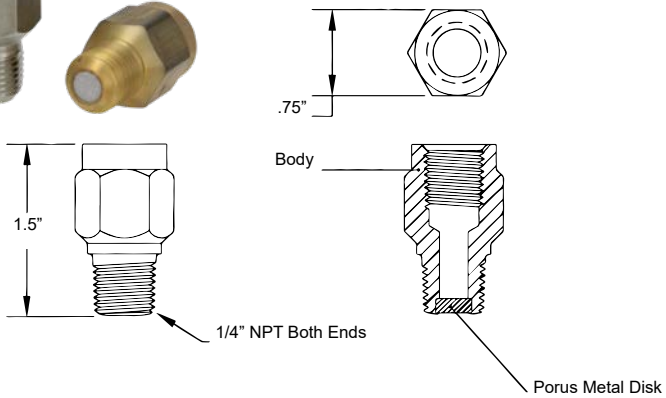

SHORT ORIFICE PISTON TYPE				
Max. PSI	NPT	Length (in.)	Material	Part #
5,000	1/4”	1.5”	Brass	PXS-022B
			Monel	PXS-022M
15,000			303SS	PXS-022S
			316SS	PXS-022SS
5,000	1/2”	2”	Brass	PXS-023B
			Monel	PXS-023M
15,000			303SS	PXS-023S
			316SS	PXS-023SS

- A Moving Piston Design for Self-cleaning Action
- A Solid Body for High Pressure Resistance
- Three Pistons Included for Adjustable Snubbing

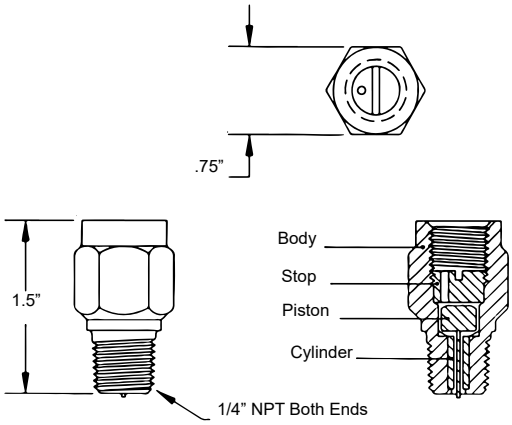

LONG ORIFICE PISTON TYPE				
Max. PSI	NPT	Length (in.)	Material	Part #
3,000	1/4”	3.46”	Brass	PXS-010B
5,000			303SS	PXS-010S
			316SS	PXS-010SS
5,000	1/2”	2”	Brass	PXS-060B
10,000			303SS	PXS-060S
			316SS	PXS-060SS

- A Long Orifice for Smoother Snubbing
- A Moving Piston Design for Self-cleaning Action
- Three Pistons Included for Adjustable Snubbing
- Center Joint (1/4” and brass models) for Easier Adjustment

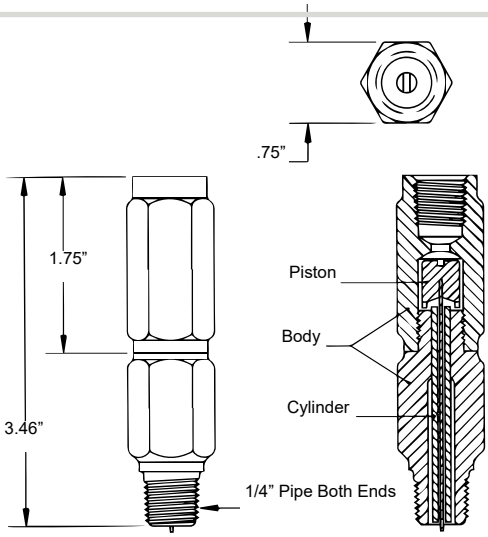

SIPHONS

Style
180°
90°
270°
360°

Pigtail siphons are used in steam service to protect the instrument from direct exposure to high temperature steam.

COMMON SIPHON PART NUMBERS

			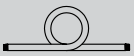		
NPT	Material	Schedule	180°	90°	360°
1/4”	Steel	40	PXS21SS	PXS22SS	PXS24SS
1/4”		80	PXS21SX	PXS22SX	PXS24SX
1/2”		80	PXS51SX	PXS52SX	PXS54SX
1/4”	304SS	40	PXS214S	PXS224S	PXS244S
1/4”		80	PXS214X	PXS224X	PXS244X
1/2”		80	PXS514X	PXS524X	PXS544X
1/2”	316SS	40	PXS516S	PXS526S	PXS546S

HOW TO ORDER: Choose options to build a part number. For example: PXS516S

PXS	5	1	6	S
MODEL	NPT	STYLE	MATERIAL	PIPE SCHEDULE
PXS = Pigtail Siphon	2 = 1/4” 5 = 1/2”	1 = 180° 2 = 90° 3 = 270° 4 = 360°	S = Carbon Steel 4 = 304SS 6 = 316SS 1 = Chrome Moly P11 2 = Chrome Moly P22 *Other Materials Available*	S = Schedule 40 X = Schedule 80 1 = Schedule 160 (1/2” ONLY) D = XX Heavy (1/2” ONLY)

REOTEMP®
INSTRUMENTS

DIAL INDICATING THERMOMETERS

As one of the most experienced US manufacturers of temperature measurement products, REOTEMP has a broad product offering of high-quality dial indicating thermometers. REOTEMP offers rigid mount bimetallic thermometers, surface mount thermometers, remote reading thermometers, digital thermometers, and many other temperature indicating products for the industrial markets. Recognized for building durable, reliable products at industry leading lead times, you can count on REOTEMP to solve your temperature measurement needs.

BACK CONNECT BIMETAL THERMOMETER

REOTEMP's Bimetal Thermometers are reliable and accurate temperature sensors requiring no electricity or wiring. Back Connect Thermometers are ideal for local, eye-level temperature readings in most process applications. They can be recalibrated with a turn of the calibration screw on the back of the dial. A variety of options are available for your specific process needs.

Fillable | Dials | Accuracy | Custom Logo | ASME B40.3

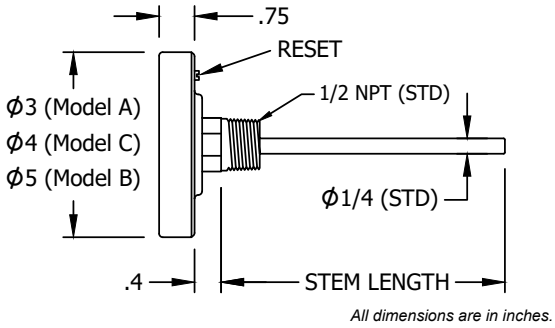

Standard Dimensions

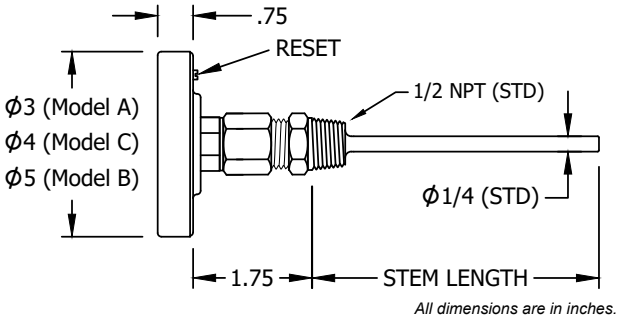

Fixed Union

FEATURES / BENEFITS

- Heavy-Duty Process Grade Design
- Five Year Warranty
- Made in the USA
- Accuracy ± 1% Full Scale (ASME B40.3 Grade A)
- Hermetically Sealed (ASME B40.3)
- Standard External Reset for Calibration
- Silicone Fillable for Vibration

SPECIFICATIONS

Accuracy	± 1% Full Scale (ASME B40.3)
Dial Size	3", 4" or 5"
Dial Material	Black marks on satin matte aluminum finish, Hi-Vis™, or white dial
Stem Length	2" to 80"
Stem Diameter	1/4" (Standard), 3/8" or 5/16"
Head, Bezel, Mounting Bushing, Stems	300 Series SS, 316SS (Optional)
Operating Conditions	Head temperature should not exceed 200°F (150°F if silicone filled). Stem should not be exposed to continuous temperatures exceeding 50% over-range or 800°F (550°F if silicone filled).
Environmental Protection	IP67, NEMA 6 Rated (Hermetically sealed per ASME B40.3)
Lens	Glass (Standard), Acrylic, Polycarbonate, Laminated Safety Glass or Tempered Glass
Immersion	Minimum 2" in liquid, and 4" in gas for most ranges. Certain ranges require up to 4" in liquids & 5" in gas.
Mounting Connection	1/2" NPT (Standard), 1/4" NPT, 3/4" NPT, Plain Hex Bushing, or 1/2" BSPT
Temperature Sensing Area	Last 2" to 4" of the stem

BACK CONNECT BIMETAL THERMOMETER

Visit reotemp.com

- ✓ Check Stock
- ✓ Configure Part #
- ✓ Get Price
- ✓ Generate a Custom Engineering Drawing

HOW TO ORDER: Choose options to build a part number. For example: AA0251F23-SF

AA	025	1	F23	-SF
DIAL SIZE	**STEM LENGTH**	**CONNECTION**	**TEMPERATURE RANGE**	**OPTIONS**

Standard Model
AA = 3" Dial w/ Reset
CC = 4" Dial w/ Reset
BB = 5" Dial w/ Reset

Non-Reset Model
RR = 3" Dial w/o Reset
CN = 4" Dial w/o Reset
SS = 5" Dial w/o Reset

025 = 2.5"
040 = 4"
060 = 6"
090 = 9"
120 = 12"
150 = 15"
180 = 18"
240 = 24"
300 = 30"
360 = 36"

Note: Intermediate stem lengths available up to 80".

Millimeter Stem Lengths
M???? = Use a code beginning in M to specify a mm stem length ex: 100mm = M0100

1 = 1/2" NPT
4 = 1/4" NPT
5 = 3/4" NPT Adapter
X = Plain Unthreaded Hex Bushing
B = 1/2" BSPT
U = 1/2" NPT Union

Fahrenheit Ranges
F23 = -40°F to 160°F
***F55** = 25°F to 125°F
F43 = 0°F to 200°F
F47 = 0°F to 250°F
F63 = 50°F to 300°F
F67 = 50°F to 500°F
F69 = 50°F to 550°F
F81 = 150°F to 750°F
F85 = 200°F to 1000°F

Celsius Ranges
C23 = -40°C to 70°C
C55 = 0°C to 50°C*
C43 = 0°C to 100°C
C47 = -20°C to 120°C
C59 = 0°C to 150°C
C67 = 0°C to 250°C
C69 = 0°C to 300°C
C73 = 0°C to 400°C
C85 = 100°C to 500°C

Dual Scale Ranges
D23 = -40°F to 160°F & -40°C to 70°C
***D55** = 25°F to 125°F & -5°C to 50°C
D43 = 0°F to 200°F & -10°C to 90°C
D47 = 0°F to 250°F & -20°C to 120°C
D63 = 50°F to 300°F & 10°C to 150°C
D67 = 50°F to 500°F & 10°C to 260°C
D69 = 50°F to 550°F & 10°C to 290°C
D81 = 150°F to 750°F & 70°C to 400°C
D85 = 200°F to 1000°F & 100°C to 500°C

*Not available in 2.5" stem.

For Additional Ranges See Master Range Code Sheet on Page 141

General Options
-3H = 316 SS Head and Bezel
-PS = Pointed Stem
-S3 = 3/8" diameter Stem
-F5 = 5/16" diameter Stem (Not Available with 316SS Stem)
-SF = Silicone Filled
-SS = 316 Stainless Stem
-WD = White Dial
-HV = Hi-Vis™ Dial
-NL = No Logo Dial
-CB = Color Bands
-PI = Color Pie
-CL = Custom Logo Dial

Window Options (Standard is Glass)
-MM = Min-Max Pointer (Plastic Lens)
-PC = Acrylic Window
-PY = Polycarbonate Window
-TG = Tempered Glass Window
-SG = Laminated Safety Glass

Calibration Cert. Options
-R1 = One Point Calibration Cert (REOTEMP Chooses Points)
-R3 = Three Point Calibration Cert (REOTEMP Chooses Points)
-C1 = One Point Calibration Cert (Customer Chooses Points)
-C3 = Three Point Calibration Cert (Customer Chooses Points)

Tags and Accessories
-TS = Tag, Stainless
-TP = Tag, Paper
-AS = Adapts Bimet to 1-1/4-18 industrial socket
-HT = Heat Transfer Compound

For Additional Options See Page 139

For Thermowells See Pages 160-166

Note: Thermowells should be used whenever the stem or bulb would be exposed to pressure, corrosion, velocity, abrasion or shear forces. Thermowells also make it possible to remove the thermometer without losing pressure or the contents of the process.

ADJUSTABLE ANGLE BIMETAL THERMOMETER

REOTEMP's Bimetal Thermometers are reliable and accurate temperature sensors requiring no electricity or wiring. Adjustable Angle Thermometers allow for easy temperature monitoring from any position and they are ideal for local indication. They can be recalibrated with a turn of the calibration screw on the back of the dial.

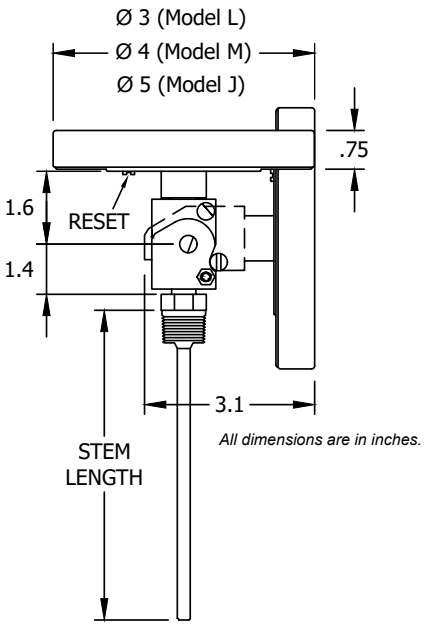

Fillable Dials Accuracy Custom Logo ASME B40.3

FEATURES / BENEFITS

- Heavy-Duty Process Grade Design
- Five Year Warranty
- Made in the USA
- Dial is Adjustable to Any Position for Easy Viewing
- Accuracy ± 1% Full Scale. (ASME B40.3)
- Hermetically Sealed (ASME B40.3)
- Standard External Reset for Easy Calibration
- Silicone Fillable for Vibration

SPECIFICATIONS

Accuracy	± 1% Full Scale (ASME B40.3)
Dial Size	3", 4" or 5"
Dial Material	Black marks on satin matte aluminum finish, Hi-Vis™, or white dial
Stem Length	2" to 80"
Stem Diameter	1/4" (Standard), 3/8" or 5/16"
Head, Bezel, Mounting Bushing, Stems	300 Series SS, 316SS (Optional)
Operating Conditions	Head temperature should not exceed 200°F (150°F if silicone filled). Stem should not be exposed to continuous temperatures exceeding 50% over-range or 800°F (550°F if silicone filled).
Environmental Protection	IP67, NEMA 6 Rated (Hermetically sealed per ASME B40.3)
Lens	Glass (Standard), Acrylic, Polycarbonate, Laminated Safety Glass or Tempered Glass
Immersion	Minimum 2" in liquid, and 4" in gas for most ranges. Certain ranges require up to 4" in liquids & 5" in gas.
Mounting Connection	1/2" NPT (Standard), 1/4" NPT, 3/4" NPT, Plain Hex Bushing, or 1/2" BSPT
Temperature Sensing Area	Last 2" to 4" of the stem

ADJUSTABLE ANGLE BIMETAL THERMOMETER

Visit reotemp.com

- ✓ Check Stock
- ✓ Configure Part #
- ✓ Get Price
- ✓ Generate a Custom Engineering Drawing

HOW TO ORDER: Choose options to build a part number. For example: LL0251F23-SF

LL	025	1	F23	-SF
DIAL SIZE	**STEM LENGTH**	**CONNECTION**	**TEMPERATURE RANGE**	**OPTIONS**

LL = 3" Dial w/ Reset
MM = 4" Dial w/ Reset
JJ = 5" Dial w/ Reset

025 = 2.5"
040 = 4"
060 = 6"
090 = 9"
120 = 12"
150 = 15"
180 = 18"
240 = 24"
300 = 30"
360 = 36"

Note: Intermediate stem lengths available up to 80".

Millimeter Stem Lengths
M???? = Use a code beginning in M to specify a mm stem length ex: 100mm = M0100

1 = 1/2" NPT
4 = 1/4" NPT
5 = 3/4" NPT Adapter
X = Plain Unthreaded Hex Bushing
U = 1/2" NPT Union

Fahrenheit Ranges
F23 = -40°F to 160°F
F55 = 25°F to 125°F*
F43 = 0°F to 200°F
F47 = 0°F to 250°F
F63 = 50°F to 300°F
F67 = 50°F to 500°F
F69 = 50°F to 550°F
F81 = 150°F to 750°F
F85 = 200°F to 1000°F

Celsius Ranges
C23 = -40°C to 70°C
C55 = 0°C to 50°C*
C43 = 0°C to 100°C
C4 = -20°C to 120°C
C59 = 0°C to 150°C
C67 = 0°C to 250°C
C69 = 0°C to 300°C
C73 = 0°C to 400°C
C85 = 100°C to 500°C

Dual Scale Ranges
D23 = -40°F to 160°F & -40°C to 70°C
D55 = 25°F to 125°F & -5°C to 50°C*
D43 = 0°F to 200°F & -10°C to 90°C
D47 = 0°F to 250°F & -20°C to 120°C
D63 = 50°F to 300°F & 10°C to 150°C
D67 = 50°F to 500°F & 10°C to 260°C
D69 = 50°F to 550°F & 10°C to 290°C
D81 = 150°F to 750°F & 70°C to 400°C
D85 = 200°F to 1000°F & 100°C to 500°C

*Not available in 2.5" stem.

For Additional Ranges See Master Range Code Sheet on Page 141

General Options
-3H = 316 SS Head and Bezel
-PS = Pointed Stem
-S3 = 3/8" diameter Stem
-F5 = 5/16" diameter Stem (Not Available with 316SS Stem)
-SF = Silicone Filled
-SS = 316 Stainless Stem
-WD = White Dial
-HV = Hi-Vis™ Dial
-NL = No Logo Dial
-CB = Color Bands
-PI = Color Pie
-CL = Custom Logo Dial

Window Options (Standard is Glass)
-MM = Min-Max Pointer (Plastic Lens)
-PC = Acrylic Window
-PY = Polycarbonate Window
-TG = Tempered Glass Window
-SG = Laminated Safety Glass

Calibration Cert. Options
-R1 = One Point Calibration Cert (REOTEMP Chooses Points)
-R3 = Three Point Calibration Cert (REOTEMP Chooses Points)
-C1 = One Point Calibration Cert (Customer Chooses Points)
-C3 = Three Point Calibration Cert (Customer Chooses Points)

Tags and Accessories
-TS = Tag, Stainless
-TP = Tag, Paper
-AS = Adapts Bimet to 1-1/4-18 industrial socket
-HT = Heat Transfer Compound

For Additional Options See Page 139

For Thermowells See Pages 160-166

Note: Thermowells should be used whenever the stem or bulb would be exposed to pressure, corrosion, velocity, abrasion or shear forces. Thermowells also make it possible to remove the thermometer without losing pressure or the contents of the process.

BOTTOM CONNECT BIMETAL THERMOMETER

REOTEMP's Bimetal Thermometers are reliable and accurate temperature sensors requiring no electricity or wiring. Bottom Connect Thermometers are ideal for side and elevated installations on tops or sides of tanks or pipes and are ideal for local indication. They can be recalibrated with a turn of the calibration screw on the back of the dial. A variety of options are available for your specific process needs.

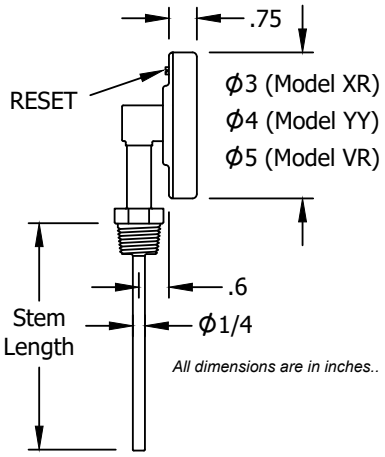

Fillable | Dials | Accuracy | Custom Logo | ASME B40.3

FEATURES / BENEFITS

- Heavy-Duty Process Grade Design
- Five Year Warranty
- Made in the USA
- Accuracy ± 1% Full Scale. (ASME B40.3)
- Hermetically Sealed (ASME B40.3)
- Standard External Reset for Easy Calibration
- OEM Logo Dials/Custom Dials
- Silicone Fillable for Vibration

SPECIFICATIONS

Accuracy	± 1% Full Scale (ASME B40.3)
Dial Size	3", 4" or 5"
Dial Material	Black marks on satin matte aluminum finish, Hi-Vis™, or white dial
Stem Length	2" to 80"
Stem Diameter	1/4" (Standard), 3/8" or 5/16"
Head, Bezel, Mounting Bushing, Stems	300 Series SS, 316SS (Optional)
Operating Conditions	Head temperature should not exceed 200°F (150°F if silicone filled). Stem should not be exposed to continuous temperatures exceeding 50% over-range or 800°F (550°F if silicone filled).
Environmental Protection	IP67, NEMA 6 Rated (Hermetically sealed per ASME B40.3)
Lens	Glass (Standard), Acrylic, Polycarbonate, Laminated Safety Glass or Tempered Glass
Immersion	Minimum 2" in liquid, and 4" in gas for most ranges. Certain ranges require up to 4" in liquids & 5" in gas.
Mounting Connection	1/2" NPT (Standard), 1/4" NPT, 3/4" NPT, Plain Hex Bushing, or 1/2" BSPT
Temperature Sensing Area	Last 2" to 4" of the stem

BOTTOM CONNECT BIMETAL THERMOMETER

Visit reotemp.com

- ✓ Check Stock
- ✓ Configure Part #
- ✓ Get Price
- ✓ Generate a Custom Engineering Drawing

HOW TO ORDER: Choose options to build a part number. For example: XR0251F23-SF

XR	025	1	F23	-SF
DIAL SIZE	**STEM LENGTH**	**CONNECTION**	**TEMPERATURE RANGE**	**OPTIONS**

Standard Model

XR = 3" Dial w/ Reset
YY = 4" Dial w/ Reset
VR = 5" Dial w/ Reset

Non-Reset Model

XX = 3" Dial w/o Reset
YN = 4" Dial w/o Reset
VV = 5" Dial w/o Reset

025 = 2.5"
040 = 4"
060 = 6"
090 = 9"
120 = 12"
150 = 15"
180 = 18"
240 = 24"
300 = 30"
360 = 36"

Note: Intermediate stem lengths available up to 80".

Millimeter Stem Lengths
M???? = Use a code beginning in M to specify a mm stem length ex: 100mm = M0100

1 = 1/2" NPT
4 = 1/4" NPT
5 = 3/4" NPT Adapter
X = Plain Unthreaded Hex Bushing
U = 1/2" NPT Union

Fahrenheit Ranges
F23 = -40°F to 160°F
F55 = 25°F to 125°F*
F43 = 0°F to 200°F
F47 = 0°F to 250°F
F63 = 50°F to 300°F
F67 = 50°F to 500°F
F69 = 50°F to 550°F
F81 = 150°F to 750°F
F85 = 200°F to 1000°F

Celsius Ranges
C23 = -40°C to 70°C
C55 = 0°C to 50°C*
C43 = 0°C to 100°C
C4 = -20°C to 120°C
C59 = 0°C to 150°C
C67 = 0°C to 250°C
C69 = 0°C to 300°C
C73 = 0°C to 400°C
C85 = 100°C to 500°C

Dual Scale Ranges
D23 = -40°F to 160°F & -40°C to 70°C
D55 = 25°F to 125°F & -5°C to 50°C*
D43 = 0°F to 200°F & -10°C to 90°C
D47 = 0°F to 250°F & -20°C to 120°C
D63 = 50°F to 300°F & 10°C to 150°C
D67 = 50°F to 500°F & 10°C to 260°C
D69 = 50°F to 550°F & 10°C to 290°C
D81 = 150°F to 750°F & 70°C to 400°C
D85 = 200°F to 1000°F & 100°C to 500°C

*Not available in 2.5" stem.

For Additional Ranges See Master Range Code Sheet on Page 141

General Options
-3H = 316 SS Head and Bezel
-PS = Pointed Stem
-S3 = 3/8" diameter Stem
-F5 = 5/16" diameter Stem (Not Available with 316SS Stem)
-SF = Silicone Filled
-SS = 316 Stainless Stem
-WD = White Dial
-HV = Hi-Vis™ Dial
-NL = No Logo Dial
-CB = Color Bands
-PI = Color Pie
-CL = Custom Logo Dial

Window Options (Standard is Glass)
-MM = Min-Max Pointer (Plastic Lens)
-PC = Acrylic Window
-PY = Polycarbonate Window
-TG = Tempered Glass Window
-SG = Laminated Safety Glass

Calibration Cert. Options
-R1 = One Point Calibration Cert (REOTEMP Chooses Points)
-R3 = Three Point Calibration Cert (REOTEMP Chooses Points)
-C1 = One Point Calibration Cert (Customer Chooses Points)
-C3 = Three Point Calibration Cert (Customer Chooses Points)

Tags and Accessories
-TS = Tag, Stainless
-TP = Tag, Paper
-AS = Adapts Bimet to 1-1/4-18 industrial socket
-HT = Heat Transfer Compound

Mounting Orientation
-99 = 9 O'Clock Stem (Left Side)
-33 = 3 O'Clock Stem (Right Side)
-12 = 12 O'Clock Stem (Upside Down)

For Additional Options See Page 139

For Thermowells See Pages 160-166

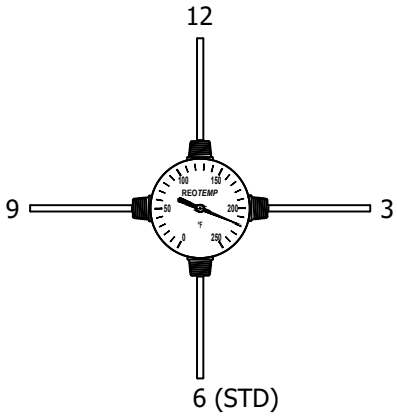

Mounting Orientation

Note: Thermowells should be used whenever the stem or bulb would be exposed to pressure, corrosion, velocity, abrasion or shear forces. Thermowells also make it possible to remove the thermometer without losing pressure or the contents of the process.

SANITARY BIMETAL THERMOMETER

REOTEMP's Sanitary Bimetal Thermometers are specially designed for direct insertion into sanitary process applications when a standard thermowell is not specified or the process environment is not exposed to pressure. Sanitary thermometers are ideal for the food, beverage and pharmaceutical industries.

Fillable | Dials | Accuracy | Custom Logo | ASME B40.3

3-A Certified

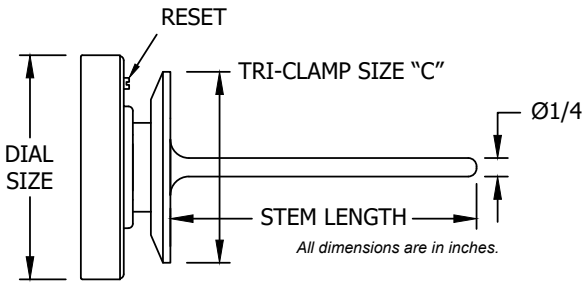

All dimensions are in inches.

Sanitary Flange Size	Diameter in Inches "C"
3/4"	.98"
1"	2"
1.5"	2"
2"	2.5"
2.5"	3"
3"	3.6"

FEATURES / BENEFITS

- Five Year Warranty
- Made in the USA
- 3-A Conformance Certificate Included
- Accuracy ± 1% Full Scale. (ASME B40.3)
- Hermetically Sealed (ASME B40.3)
- Standard External Reset
- Tri-Clamp® Design for Fast Installation and Removal
- Silicone Fillable for Vibration

SPECIFICATIONS

Accuracy	± 1% Full Scale (ASME B40.3)
Dial Size	3", 4" or 5"
Dial Material	Black marks on satin matte aluminum finish, Hi-Vis™, or white dial
Stem Length	2" to 80"
Stem Diameter	1/4" (Standard), or 3/8"
Head, Bezel, Mounting Bushing	300 Series SS, or 316SS (Optional)
Stem & Tri-Clamp	316SS
Operating Conditions	Head temperature should not exceed 200°F (150°F if silicone filled). Stem should not be exposed to continuous temperatures exceeding 50% over-range or 800°F (550°F if silicone filled).
Environmental Protection	IP67, NEMA 6 Rated (Hermetically sealed per ASME B40.3)
Lens	Polycarbonate(Standard), Glass, Acrylic, Laminated Safety Glass or Tempered Glass
Immersion	Minimum 2" in liquid, and 4" in gas for most ranges. Certain ranges require up to 4" in liquids & 5" in gas.
Mounting Connection	Sanitary Tri-Clamp®
Temperature Sensing Area	Last 2" to 4" of the stem

SANITARY BIMETAL THERMOMETER

Visit reotemp.com

- ✓ Check Stock
- ✓ Configure Part #
- ✓ Get Price
- ✓ Generate a Custom Engineering Drawing

HOW TO ORDER: Choose options to build a part number. For example: XR025CF23-SF

XR	025	C	F23	-SF
DIAL SIZE	STEM LENGTH	CONNECTION	TEMPERATURE RANGE	OPTIONS

Standard Model with Reset

Dial Size	3”	4”	5”
Back Connect	AA	CC	BB
Adjustable Angle	LL	MM	JJ
Bottom Connect	XR	YY	VR

Non-Reset Model

Dial Size	3”	4”	5”
Back Connect	RR	CN	SS
Bottom Connect	XX	YN	VN

025 = 2.5”
040 = 4”
060 = 6”
090 = 9”
120 = 12”
150 = 15”
180 = 18”
240 = 24”
300 = 30”
360 = 36”

Note: Intermediate stem lengths available up to 80”.

Millimeter Stem Lengths
M???? = Use a code beginning in M to specify a mm stem length ex: 100mm = M0100

Sanitary
C = 1.5” Tri-Clamp®
L = 2” Tri-Clamp®
A = 2.5” Tri-Clamp®
P = 3” Tri-Clamp®
M = 3/4” Tri-Clamp®

Other sanitary flanges available.

Fahrenheit Ranges
F23 = -40°F to 160°F
F55 = 25°F to 125°F*
F43 = 0°F to 200°F
F47 = 0°F to 250°F
F63 = 50°F to 300°F
F67 = 50°F to 500°F
F69 = 50°F to 550°F
F81 = 150°F to 750°F
F85 = 200°F to 1000°F

Celsius Ranges
C23 = -40°C to 70°C
C55 = 0°C to 50°C*
C43 = 0°C to 100°C
C4 = -20°C to 120°C
C59 = 0°C to 150°C
C67 = 0°C to 250°C
C69 = 0°C to 300°C
C73 = 0°C to 400°C
C85 = 100°C to 500°C

Dual Scale Ranges
D23 = -40°F to 160°F & -40°C to 70°C
D55 = 25°F to 125°F & -5°C to 50°C*
D43 = 0°F to 200°F & -10°C to 90°C
D47 = 0°F to 250°F & -20°C to 120°C
D63 = 50°F to 300°F & 10°C to 150°C
D67 = 50°F to 500°F & 10°C to 260°C
D69 = 50°F to 550°F & 10°C to 290°C
D81 = 150°F to 750°F & 70°C to 400°C
D85 = 200°F to 1000°F & 100°C to 500°C

*Not available in 2.5” stem.

For Additional Ranges See Master Range Code Sheet on Page 141

General Options
-3H = 316 SS Head and Bezel
-PS = Pointed Stem
-S3 = 3/8” diameter Stem
-SF = Silicone Filled
-WD = White Dial
-HV = Hi-Vis™ Dial
-NL = No Logo Dial
-CB = Color Bands
-PI = Color Pie
-CL = Custom Logo Dial

Window Options (Standard is Glass)
-MM = Min-Max Pointer (Plastic Lens)
-PC = Acrylic Window
-PY = Polycarbonate Window
-TG = Tempered Glass Window
-SG = Laminated Safety Glass

Calibration Cert. Options
-R1 = One Point Calibration Cert (REOTEMP Chooses Points)
-R3 = Three Point Calibration Cert (REOTEMP Chooses Points)
-C1 = One Point Calibration Cert (Customer Chooses Points)
-C3 = Three Point Calibration Cert (Customer Chooses Points)

Tags and Accessories
-TS = Tag, Stainless
-TP = Tag, Paper
-AS = Adapts Bimet to 1-1/4-18 industrial socket
-HT = Heat Transfer Compound

For Additional Options See Page 139

For Thermowells See Pages 160-166

Note: Thermowells should be used whenever the stem or bulb would be exposed to pressure, corrosion, velocity, abrasion or shear forces. Thermowells also make it possible to remove the thermometer without losing pressure or the contents of the process.

DUAL MODE THERMOMETER

REOTEMP's Dual Mode Thermometer (DMT) is a convenient, multi-purpose indicator for local and remote temperature monitoring. This rugged dual-sensor system puts TWO independent sensors in ONE THERMOWELL, and allows easy tie-in to process controls. Both sensors are NIST traceable. Special sensor encapsulation and optional liquid filling make the DMT the most rugged, durable instrument of its kind.

Fillable | Dials | Accuracy | Custom Logo | Made in the USA

Bimetal Thermometer

- Local Easy-to-Read Temperature Indication
- Self-Actuating, Dampened Bimetal Helix Sensor
- Hermetically sealed per ASME B40.3 (3/8" stem only)

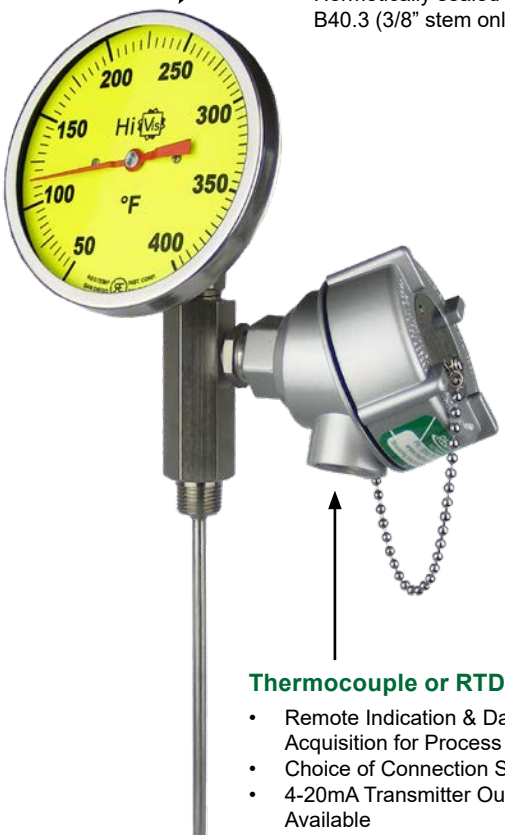

Thermocouple or RTD

- Remote Indication & Data Acquisition for Process Control
- Choice of Connection Styles
- 4-20mA Transmitter Output Available

FEATURES / BENEFITS

- Increase Reliability with Independent Local and Remote Reading (Up to 1000°F) from One Thermowell
- Redundant Sensors for Simple, Effective Calibration or Spot Checking Without Removing the Instrument from the Thermowell
- Interchangeable with Existing Thermometer, RTD, or Thermocouple

SPECIFICATIONS

Case & Bezel	304SS (Standard), 316SS
Case Style	Back or Adjustable Angle Connection
Dial Size	3", 4", or 5"
Process Connections	1/2" NPT (Standard) or 1/2" NPT Union
External Reset	Slotted Hex Screw
Lens	Glass (Standard), Plastic or Tempered Glass
Hermetic Seal	Bimetal Thermometer per ASME B40.3 (3/8" Stem Only)
Stem Material	304SS (Standard) or 316SS (Optional)
Stem Diameter	3/8" or 1/4"
Stem Length	2-1/2" to 36"
Bimetal Ranges	Standard Ranges and Divisions up to 800°F (538°C), See Page 141 for Complete Range Code Guide
Bimetal Over-range	50% Over Range to 550°F, 1000°F Max
Bimetal Accuracy	± 1% of Full Scale
TC/RTD Temperature Limits	-100°F to 1000°F (Thermocouple), -100°F to 600°F (RTD - DM4 Model), -100°F to 900°F (RTD - DMT Model)
Thermocouple	Type K Grounded Junction (Standard), Types T, E, J, and Ungrounded
Thermocouple Accuracy	Type K ± 2.2°C or 0.75% (-200°C to 1260°C), Whichever is Greater, Others Available Upon Request
RTD	Pt/385/Class B 100Ω (Std.), Others Available
RTD Accuracy	0.12%°C (Standard), Others Available
Head Orientation	RTD or Thermocouple Head is Mounted to the Right of the Bimetal Thermometer
Thermowell	Model DMT Fits Any Standard 0.385" Bore Thermowell or Model DM4 Fits 0.260" Bore

DUAL MODE THERMOMETER

Visit reotemp.com

- ✓ Check Stock
- ✓ Configure Part #
- ✓ Get Price
- ✓ Generate a Custom Engineering Drawing

HOW TO ORDER: Choose options to build a part number. For example: DMTA040F23TKAA-HV

DM TA 040 F23 TK A A -HV

STYLE & STEM DIAMETER

3/8" Stem
TA = 3" Back Connect
TC = 4" Back Connect
TB = 5" Back Connect
TL = 3" Adjustable-Angle
TM = 4" Adjustable-Angle
TJ = 5" Adjustable-Angle

1/4" Stem
4A = 3" Back Connect
4C = 4" Back Connect
4B = 5" Back Connect
4L = 3" Adjustable-Angle
4M = 4" Adjustable-Angle
4J = 5" Adjustable-Angle

STEM LENGTH

025 = 2.5"*
040 = 4"
060 = 6"
090 = 9"
120 = 12"
150 = 15"
180 = 18"
240 = 24"
300 = 30"
360 = 36"

*Only available on 3/8" stem diameter.

Note: Intermediate stem lengths available up to 80".

Millimeter Stem Lengths
M???? = Use a code beginning in M to specify a mm stem length ex: 100mm = M0100

TEMPERATURE RANGE

Fahrenheit Ranges
F23 = -40°F to 160°F
F55 = 25°F to 125°F*
F43 = 0°F to 200°F
F47 = 0°F to 250°F
F53 = 20°F to 240°F
F63 = 50°F to 300°F
F69 = 50°F to 550°F

*Not available in 2.5" stem.

For Additional Ranges See Master Range Code Sheet on Page 141

SENSOR

Thermocouple (Single, Grounded)
TK = Type K
TJ = Type J
TE = Type E
TT = Type T

Thermocouple (Single, Ungrounded)
UK = Type K
UJ = Type J
UE = Type E
UT = Type T

Thermocouple (Dual, Grounded)
TKK = Type K
TJJ = Type J
TEE = Type E
TTT= Type T

Thermocouple (Dual, Ungrounded)
UKK = Type K
UJJ = Type J
UEE = Type E
UTT = Type T

RTD (Single)
RC = RTD, Pt. 100 ohm, 3-wire (Max. 600°F - DM4) (Max. 900°F - DMT)

HEADS/OUTPUT CONNECTIONS

A = Cast Iron Black
C = Poly Plastic Black
E = Explosion Proof Aluminum
G = 316SS
H = Cast Aluminum
M = Aluminum Flip Top
I = Blue Epoxy-Coated Aluminum
J = Explosion Proof 316SS
S = Poly Plastic White
T = ATEX Explosion Proof Aluminum
Z = Window Explosion Proof (Digital Display Required)
EC = 1/2" NPT Male Electrical Connection w/ Lead Wire (See Drawing & Ignore Electrical Connection Section)

ELECTRICAL CONNECTION

A = Terminal Block
N = No Terminal Block, 6" Leads
T = 4-20mA Xmtr
D = 4-20mA Hart Xmtr
B = 4-20mA Xmtr w/ Display*
H = 4-20mA Hart Xmtr w/ Display*

*Only available with Z Head

OPTIONS

General Options
-HV = Hi-Vis™ Dial
-UF = Fixed Union
-US = Sliding Union
-3H = 316 SS Head and Bezel
-SF = Silicone Filled (Max 500°F)
-SS = 316 Stainless Stem
-NL = No Logo Dial
-CL = Custom Logo Dial

Window Options (Standard is Glass)
-MM = Min-Max Pointer (Plastic Lens)
-PC = Acrylic Window
-PY = Polycarbonate Window
-TG = Tempered Glass Window

Sanitary Connections
-SC = 1.5" or 1" Tri-Clamp
-SL = 2" Tri-Clamp
-SA = 2.5" Tri-Clamp
-SP = 3" Tri-Clamp

Calibration Cert. Options
-R1 = One Point Calibration Cert (REOTEMP Chooses Points)
-R3 = Three Point Calibration Cert (REOTEMP Chooses Points)

Tags and Accessories
-TS = Tag, Stainless
-AS = Adapts Bimet to 1-1/4-18 industrial socket
-HT = Heat Transfer Compound

For Additional Options See Page 139

For Thermowells See Pages 160-166

Note: Thermowells should be used whenever the stem or bulb would be exposed to pressure, corrosion, velocity, abrasion or shear forces. Thermowells also make it possible to remove the thermometer without losing pressure or the contents of the process.

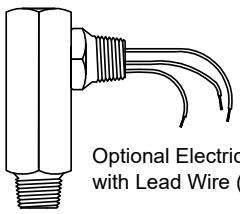

Optional Electrical Connection with Lead Wire (EC)

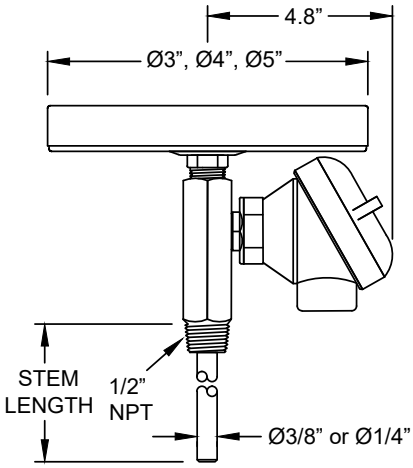

NAVY TYPE DUAL MODE THERMOMETER

REOTEMP's Navy Type Dual Mode Thermometer combines a bimetal thermometer and RTD sensor into the same stem. This provides local indication and remote reading from a single instrument. The unit has a heavy duty, all-welded construction built to withstand tough shock and high vibration environments. The DMS option meets the requirements for MIL-S-901D and MIL-STD-167-1A for navy mil-spec shock and vibration.

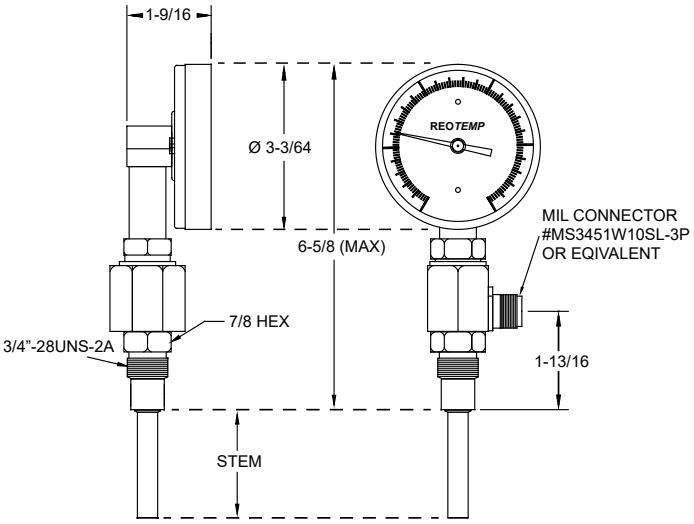

Made in the USA

FEATURES / BENEFITS

- An Improved Dual Element Alternative to Standard MIL-I-17244E Bimetal Thermometer
- Reinforced Construction Designed for Use on Navy Ships and Other Demanding Applications
- Independent Local and Remote Reading (Up to 1000°F) from One Thermowell
- Redundant Sensors for Simple, Effective Calibration or Spot Checking Without Removing the Instrument from the Thermowell
- Interchangeable with Existing Thermometer, RTD, or Thermocouple
- DMS Model is Navy Mil-Spec Approved (MIL-S-901D & MIL-STD-167-1A)

SPECIFICATIONS

Approvals (Optional)	MIL-S 901D (Shock) and MIL-STD-167 (Vibration)
Sensor	100Ω Platinum 3 WireRTD
RTD Temperature Range	-40°F to 1000°F
Accuracy	RTD: Class B Bimetal: ± 1% of Scale
Electrical Connection	Mil Connector MS3451W10SL-3P 3 Pin Electrical Cable Connection
Dial Range	All Standard Bimetal Ranges. See page 141 for a Complete Range Code Guide
Dial Size	3" or 5"
Process Connections	3/4"-28 Thread, 1/2" NPT, or 7/8" 14 with Fixed Swivel Union and Navy Collar
Stem Diameter	3/8" DMN & DMS Models, 1/4" for DMC
Lens	Polycarbonate
Stem Material	304SS
External Dial Reset	Slotted Hex Screw

NAVY TYPE DUAL MODE THERMOMETER

HOW TO ORDER: Choose options to build a part number. For example: DMNA04F53RA3

DM	N	A	04	F53	R	A3	
	STYLE	BIMETAL CONNECTION	STEM LENGTH	TEMPERATURE RANGE	SENSOR TYPE	ELECTRICAL CONNECTION	PROCESS CONNECTION
	N = Navy Type 3/8" Stem; Fixed Swivel Union **C** = Navy Type 1/4" Stem; Fixed Swivel Union	**A** = 3" Back **X** = 3" Bottom Reset **L** = 3" Adjustable **J** = 5" Adjustable	**02** = 2" **04** = 4" **06** = 6" **09** = 9" Note: Intermediate lengths available.	**F53** = 20°F to 240°F **F69** = 50°F to 550°F **F85** = 200°F 1,000°F Other Ranges Available, See page 141 for a Complete Range Code Guide	**R** = RTD, Pt 100/385 High Vibration	**A3** = Mil Spec 3 Pin Connector	**No Code** = 3/4"-28 Fixed Swivel Union with Navy Collar (Standard) **P** = 1/2" NPT Fixed Swivel Union w/ Navy Collar **I** = 7/8"-14 Fixed Swivel Union w/ Navy Collar

MIL-SPEC DUAL MODE THERMOMETER

The MIL-SPEC Dual Mode Thermometer has passed rigorous impact testing to achieve MIL-S-910D (Shock) and MIL-STD-167-1A(Vibration).

HOW TO ORDER: Choose options to build a part number. For example: DMSA04F53RA3

DM	S	A	04	F53	R	A3
	STYLE	BIMETAL CONNECTION	STEM LENGTH	TEMPERATURE RANGE	SENSOR TYPE	ELECTRICAL CONNECTION
	S = Mil-Spec Approved, 3/8" Stem, 3/4"-28 Standard Thread, Fixed Swivel Union with Navy Collar	**A** = 3" Back **X** = 3" Bottom Reset	**02** = 2" **04** = 4" **06** = 6" **10** = 10" Note: Intermediate lengths available. Max stem length is 10".	**F53** = 20°F to 240°F **F69** = 50°F to 550°F **F43** = 0°F to 200°F Other Ranges Available, See page 141 for a Complete Range Code Guide	**R** = RTD, Pt 100/385 High Vibration	**A3** = Mil Spec 3 Pin Connector

HEAVY-DUTY NAVY TYPE BIMETAL THERMOMETER

REOTEMP's Bimetal Thermometers are reliable and durable temperature sensors. Navy Type Thermometers are specifically designed to resist vibration and shock. They are ideal for local indication, requiring no electricity or wiring. They can be recalibrated with a turn of the calibration screw on the back of the dial.

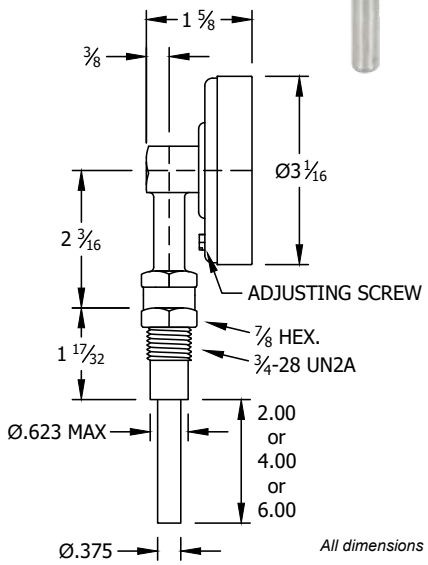

All dimensions are in inches.

Straight Form

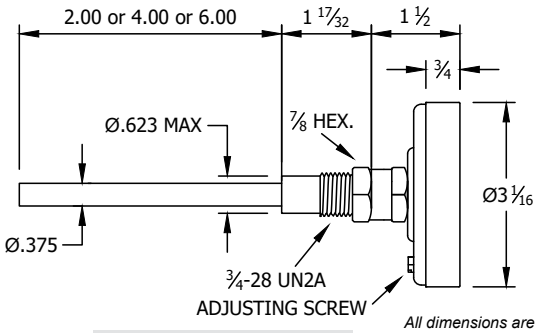

All dimensions are in inches.

Back Angle Form

Fillable | Dials | Accuracy | Custom Logo | ASME B40.3

FEATURES / BENEFITS

- Heavy-Duty Vibration and Shock Resistant
- Made in the USA
- Accuracy ± 1% Full Scale. (ASME B40.3)
- 3" Dial with Bimetal Actuation
- Hermetically Sealed (ASME B40.3)
- Plastic Crystal Polycarbonate Window
- Standard External Reset
- Fits in 5" Scale "Submarine" Thermowell
- The standard 3/4"- 28 UN2A Union Connection is designed for Navy thermowells
- Silicone Fillable for Vibration

SPECIFICATIONS

Accuracy	± 1% Full Scale (ASME B40.3)
Dial Size	3"
Dial Material	Black marks on satin matte aluminum finish, or White Dial
Stem Length	2", 4", and 6" (Standard); custom lengths available.
Stem Diameter	.375" (Standard) or 1/4"
Head, Bezel, Mounting Bushing, Stems	300 Series SS
Operating Conditions	Head temperature should not exceed 200°F (150°F if silicone filled). Stem should not be exposed to continuous temperatures exceeding 50% over-range or 800°F (550°F if silicone filled).
Environmental Protection	IP67, NEMA 6 Rated (Hermetically sealed per ASME B40.3)
Lens	Plastic
Immersion	Minimum 2" in liquid, and 4" in gas.
Mounting Connection	3/4"- 28 UN2A Union Connection (to be used in thermowell)
Temperature Sensing Area	Last 2" to 4" of the stem.

HEAVY-DUTY NAVY TYPE BIMETAL THERMOMETER

HOW TO ORDER: Choose options to build a part number. For example: AN2F21-HV

AN2	F21	-HV
MODEL	**TEMPERATURE RANGE**	**OPTIONS**
Back Angle Form **AN2** = 2” **AN4** = 4” **AN6** = 6” *Straight Form* **XN2** = 2” **XN4** = 4” **XN6** = 6”	*Fahrenheit Ranges* **F21** = -40°F to 120°F, 2° **F25** = -40°F to 180°F, 2° **F43** = 0°F to 200°F, 2° **F53** = 20°F to 240°F, 2° **F63** = 50°F to 300°F, 2° **F65** = 50°F to 400°F, 5° **F69** = 50°F to 550°F, 5° **F73** = 50°F to 750°F, 10° *Celsius Ranges* **C07** = -50°C to 50°C, 1° **C53** = -10°C to 110°C, 1° **C59** = 0°C to 150°C, 2° **C65** = 0°C to 200°C, 2° **C71** = 0°C to 300°C, 5° *4” Minimum stem length on straight, left, or right forms only. *For Additional Ranges See Master Range Code Sheet on Page 141*	*General Options (Choose up to 4)* **-SF** = Silicone Filled **-WD** = White Dial **-HV** = Hi-Vis™ Dial **-NL** = No Logo Dial **-CB** = Color Bands **-PI** = Color Pie **-MM** = Min-Max Pointer (Plastic Lens) **-CL** = Custom Logo Dial *Calibration Cert. Options* **-R1** = One Point Calibration Cert **-R3** = Three Point Calibration Cert *Tags and Accessories (up to 2)* **-TS** = Tag, Stainless **-TP** = Tag, Paper **-HT** = Heat Transfer Compound

Note: Thermowells should be used whenever the stem or bulb would be exposed to pressure, corrosion, velocity, abrasion or shear forces. Thermowells also make it possible to remove the thermometer without losing pressure or the contents of the process.

HEAVY-DUTY NAVY TYPE THERMOWELL

HOW TO ORDER: Choose options to build a part number. For example: STN2SS

STN	2	SS
WELL CLASS	**STEM LENGTH & (OVERALL LENGTH)**	**MATERIAL**
STN = Class A 3/4” NPT	**2** = 2” (3.25”) **4** = 4” (5.25”) **6** = 6” (7.25”)	**B** = Brass **S** = 304SS **SS** = 316SS
SWN = Class W Socket Weld	**2** = 2” (3 5/16”) **4** = 4” (5 5/16”) **6** = 6” (7 5/16”)	**SS** = 316SS

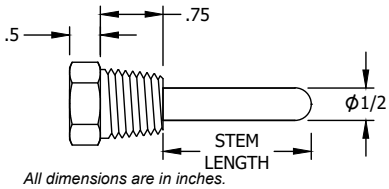

All dimensions are in inches.

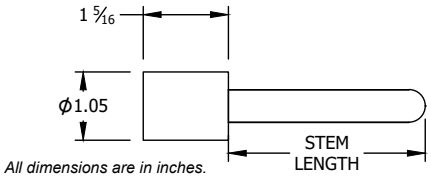

All dimensions are in inches.

DIGITAL THERMOMETER/TRANSMITTER

REOTEMP's Digital Thermometer/Transmitter is a high accuracy thermometer with digital display. It features an IP67/NEMA 4X enclosure and a 5 year battery life. The Digital Thermometer is perfect for a variety of markets and applications where a high accuracy digital readout is required.

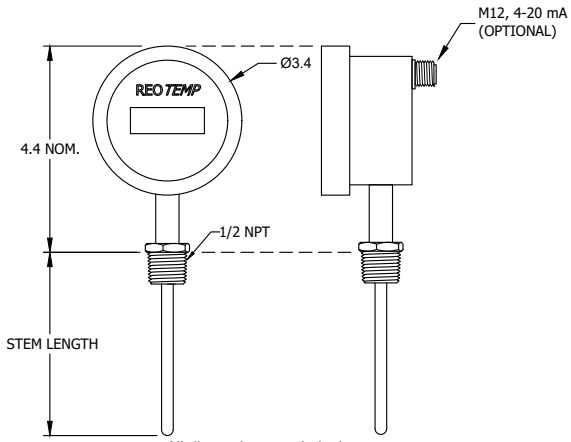

All dimensions are in inches.

M12 Wiring Diagram for 4-20 mA Output Option

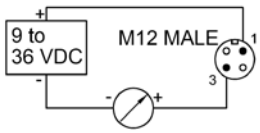

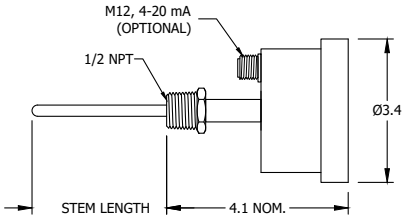

All dimensions are in inches.

Table 1: Display Resolution		
Model	Range	Decimal Point
Low Temp, Displays Decimal	-58°F to 392°F (-50C to 200C)	Yes
High Temp, No Decimal	-328°F to 1112°F (-200°C to 600°C)	No

Accuracy Custom Logo Made in the USA

FEATURES / BENEFITS

- High Accuracy 1,000Ω RTD (Class A)
- Water Resistant IP67/NEMA 4X
- 5 Year Battery Life
- 4-20 mA Output Available
- Low or High Temperature Range Models

SPECIFICATIONS

Accuracy	± (0.72 + 0.002 x | t-32 |) °F, ± (0.42 + 0.002 x | t |) °C, where t = temperature. Example: At 32°F accuracy is ± 0.72 °F.
Sensing Element	RTD, Type Pt1000Ω, Class A
Temperature Ranges	-58°F to 392°F (-50°C to 200°C) or -328°F to 1112°F (-200°C to 600°C)
Output (Optional)	4-20 mA, M12 Connector
Refresh Rate	3 Seconds
Display	4-digit LCD, 1/2" Height
Display Resolution	See Table 1
RFI Effect	1% or Less Typical
Ambient Temperature Range	32°F to 122°F (0°C to 50°C)
Housing Material	Stainless Steel 316
Lens	Plastic Polycarbonate (Standard) or Glass
Probe Material	304 Stainless Steel
Weight	12 oz., Varies by Configuration
Environmental Protection	NEMA 4X/IP67
Power	1 x 3.6V AA Battery (M12 is loop powered 9-36 VDC.)
Battery Life	5 Years Minimum in Continuous Mode
Electronic Display Temperature Limit	If the temperature of the electronics in the display housing exceeds 122°F (50°C), permanent damage to the display will occur. A remote mount is recommended for high or low temperature applications.

DIGITAL THERMOMETER/TRANSMITTER

HOW TO ORDER: Choose options to build a part number. For example: DTXN11A240A-R3

DT	X	N	1	1
MODEL	**STYLE**	**4-20 mA OUTPUT LOCATION**	**PROCESS CONNECTION**	**TEMPERATURE RANGE**
DT = Digital Thermometer	**A** = Back Connect **X** = Bottom Connect	**N** = None **S** = M12 Upper Back **T** = M12 Right Side **U** = M12 Left Side **V** = M12 Top Side **W** = M12 Bottom Side (Back Connect Style Only)	**1** = 1/2" NPT (Fits Standard Thermowell) **4** = 1/4" NPT (1/4" Dia. Stem Only) **5** = 3/4" NPT Adaptor **U** = 1/2" NPT Union (Fits Std. Thermowell) **X** = Plain Unthreaded Bushing	

Code	Temp. Range	Decimal Point
1	-58°F to 392°F	Yes
2	-50°C to 200°C	Yes
3*	-328°F to 1112°F ⚠	No
4*	-200°C to 600°C ⚠	No

⚠ *If the temperature of the electronics in the display housing exceeds 122°F (50°C), permanent damage to the display will occur. A remote mount is recommended for high or low temperature applications.

A	240	A	-R3
STEM DIAMETER	**STEM LENGTH**	**RTD**	**OPTIONS**
Straight Stems **A** = 1/4" Diameter (Standard) **F** = 3/8" Diameter **C** = 1/8" Diameter *Fast Response Stem (Not Intended for Use with a Thermowell)* **B** = 3/8" Diameter Reduced to 3/16" Diameter Tip	**025** = 2.5" **040** = 4" **060** = 6" **090** = 9" **120** = 12" **150** = 15" **180** = 18" **240** = 24" **300** = 30" **360** = 36" **???** = Custom stem length in inches. *Millimeter Stem Lengths* **M????** = Use a code beginning in M to specify a mm stem length ex: 100mm = M0100	**A** = Class A RTD, 1,000Ω	**-R1** = Cal Cert, 1 point (REOTEMP Picks Point) **-R3** = Cal Cert, 3 point (REOTEMP Picks Points) **-C1** = Cal Cert, 1 point (Customer Picks Point) **-C3** = Cal Cert, 3 points (Customer Picks Points) **-GL** = Glass Lens **-TS** = Tag, Stainless **-TP** = Tag, Paper **-EH** = Explosion Proof Head FM, CSA, ATEX, & IECEx Approved, Bottom Connection Only **-CL** = Custom Logo Dial *For Additional Options See Page 139* *For Thermowells See Pages 160-166*

Note: Thermowells should be used whenever the stem or bulb would be exposed to pressure, corrosion, velocity, abrasion or shear forces. Thermowells also make it possible to remove the thermometer without losing pressure or the contents of the process.

EH Head Approvals: FM Approved Enclosure Only: CL. I. GR. A,B,C,D; CL. II. GR E,F,G; CL. III.; Type 4X. For CSA Class I, Group A, conduit seal is required within 18 inches. CL. I, ZONE 1, ATEX: d IIC, IP66. ATEX: II 2GD Ex d tD A21 IIC, FTZU 04 ATEX 0265U. IECEx FMG 06.0003U, Ex d II C, IP68.

EH Explosion Proof Head

ADJUSTABLE ANGLE DIGITAL THERMOMETER/TRANSMITTER

REOTEMP's Adjustable Angle Digital Thermometer/Transmitter is a high accuracy thermometer with digital display. It features an IP67/NEMA 4X enclosure and a 5 year battery life. The Digital Thermometer is perfect for a variety of markets and applications where a high accuracy digital readout is required.

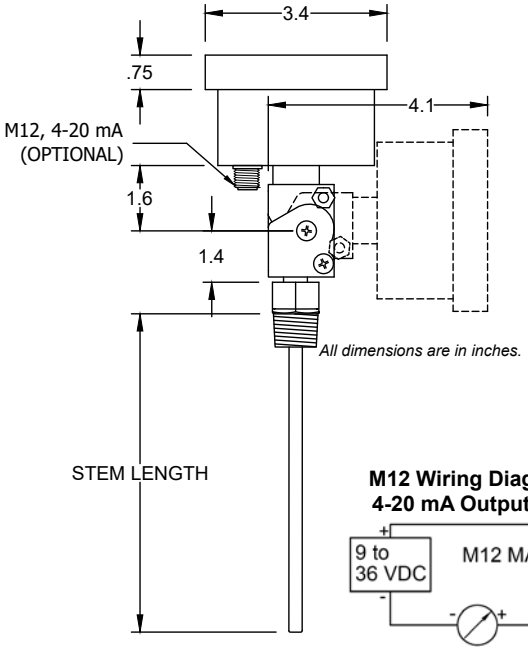

M12 Wiring Diagram for 4-20 mA Output Option

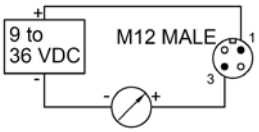

Table 1: Display Resolution		
Model	Range	Decimal Point
Low Temp, Displays Decimal	-58°F to 392°F (-50C to 200C)	Yes
High Temp, No Decimal	-328°F to 1112°F (-200°C to 600°C)	No

Accuracy Custom Logo Made in the USA

FEATURES / BENEFITS

- High Accuracy 1,000Ω RTD (Class A)
- Water Resistant IP67/NEMA 4X
- 5 Year Battery Life
- 4-20 mA Output Available
- Low or High Temperature Range Models

SPECIFICATIONS

Accuracy	± (0.72 + 0.002 x | t-32 |) °F, ± (0.42 + 0.002 x | t |) °C, where t = temperature. Example: At 32°F accuracy is ± 0.72 °F.
Sensing Element	RTD, Type Pt1000Ω, Class A
Temperature Ranges	-58°F to 392°F (-50°C to 200°C) or -328°F to 1112°F (-200°C to 600°C)
Output (Optional)	4-20 mA, M12 Connector
Refresh Rate	3 Seconds
Display	4-digit LCD, 1/2" Height
Display Resolution	See Table 1
RFI Effect	1% or Less Typical
Ambient Temperature Range	32°F to 122°F (0°C to 50°C)
Housing Material	Stainless Steel 316
Lens	Plastic Polycarbonate (Standard) or Glass
Probe Material	304 Stainless Steel
Weight	12 oz., Varies by Configuration
Environmental Protection	NEMA 4X/IP67
Power	1 x 3.6V AA Battery (M12 is loop powered 9-36 VDC.)
Battery Life	5 Years Minimum in Continuous Mode
Electronic Display Temperature Limit	If the temperature of the electronics in the display housing exceeds 122°F (50°C), permanent damage to the display will occur. A remote mount is recommended for high or low temperature applications.

ADJUSTABLE ANGLE DIGITAL THERMOMETER/TRANSMITTER

HOW TO ORDER: Choose options to build a part number. For example: DTLN11A240A-R3

DT	L	N	1	1
MODEL	**STYLE**	**4-20 mA OUTPUT LOCATION**	**PROCESS CONNECTION**	**TEMPERATURE RANGE**

MODEL

DT = Digital Thermometer

STYLE

L = Adjustable Angle

4-20 mA OUTPUT LOCATION

N = None

S = M12 Upper Back

T = M12 Right Side

U = M12 Left Side

V = M12 Top Side

PROCESS CONNECTION

1 = 1/2" NPT (Fits Standard Thermowell)
4 = 1/4" NPT (1/4" Dia. Stem Only)
5 = 3/4" NPT Adaptor
U = 1/2" NPT Union (Fits Std. Thermowell)
X = Plain Unthreaded Bushing

TEMPERATURE RANGE

Code	Temp. Range	Decimal Point
1	-58°F to 392°F	Yes
2	-50°C to 200°C	Yes
3*	-328°F to 1112°F ⚠	No
4*	-200°C to 600°C ⚠	No

⚠ *If the temperature of the electronics in the display housing exceeds 122°F (50°C), permanent damage to the display will occur. A remote mount is recommended for high or low temperature applications.

A	240	A	-R3
STEM DIAMETER	**STEM LENGTH**	**RTD**	**OPTIONS**

STEM DIAMETER

Straight Stems
A = 1/4" Dia. (Standard)
F = 3/8" Dia.

Fast Response Stem (Not Intended for Use with a Thermowell)
B = 3/8" Dia. Reduced to 3/16" Dia. Tip

STEM LENGTH

025 = 2.5"
040 = 4"
060 = 6"
090 = 9"
120 = 12"
150 = 15"
180 = 18"
240 = 24"
300 = 30"
360 = 36"
??? = Custom stem length in inches.

Millimeter Stem Lengths
M???? = Use a code beginning in M to specify a mm stem length ex: 100mm = M0100

RTD

A = Class A RTD, 1,000Ω

OPTIONS

-R1 = Cal Cert, 1 point (REOTEMP Picks Point)
-R3 = Cal Cert, 3 point (REOTEMP Picks Points)
-C1 = Cal Cert, 1 point (Customer Picks Point)
-C3 = Cal Cert, 3 points (Customer Picks Points)
-GL = Glass Lens
-TS = Tag, Stainless
-TP = Tag, Paper
-CL = Custom Logo Dial

For Additional Options See Page 139

For Thermowells See Pages 160-166

Note: Thermowells should be used whenever the stem or bulb would be exposed to pressure, corrosion, velocity, abrasion or shear forces. Thermowells also make it possible to remove the thermometer without losing pressure or the contents of the process.

SANITARY DIGITAL THERMOMETER/TRANSMITTER

REOTEMP's Sanitary Digital Thermometer/Transmitter is a high accuracy thermometer with digital display. It features an IP67/NEMA 4X enclosure, clean-in-place connection, and a 5 year battery life. The Digital Thermometer is perfect for brewing, food, beverage and pharmaceutical applications where a high accuracy digital readout is required.

3-A Certified

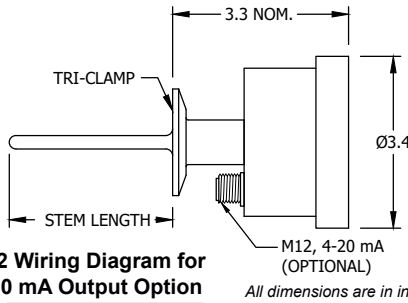

All dimensions are in inches.

M12 Wiring Diagram for 4-20 mA Output Option

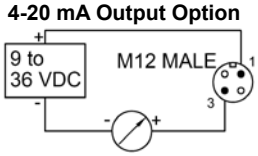

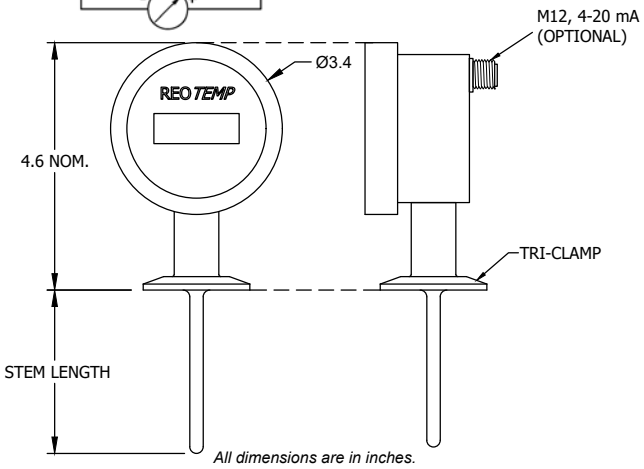

All dimensions are in inches.

Table 1: Display Resolution

Model	Range	Decimal Point
Low Temp, Displays Decimal	-58°F to 392°F (-50C to 200C)	Yes
High Temp, No Decimal	-328°F to 1112°F (-200°C to 600°C)	No

Accuracy Custom Logo Made in the USA

FEATURES / BENEFITS

- 3-A Conformance Certificate Included
- High Accuracy 1,000Ω RTD (Class A)
- Water Resistant IP67/NEMA 4X
- 5 Year Battery Life
- 4-20 mA Output Available
- Low or High Temperature Range Models

SPECIFICATIONS

Accuracy	± (0.72 + 0.002 x | t-32 |) °F, ± (0.42 + 0.002 x | t |) °C, where t = temperature. Example: At 32°F accuracy is ± 0.72 °F.
Sensing Element	RTD, Type Pt1000Ω, Class A
Temperature Ranges	-58°F to 392°F (-50°C to 200°C) or -328°F to 1112°F (-200°C to 600°C)
Output (Optional)	4-20 mA, M12 Connector
Refresh Rate	3 Seconds
Display	4-digit LCD, 1/2" Height
Display Resolution	See Table 1
RFI Effect	1% or Less Typical
Temperature Effect	32°F to 122°F (0°C to 50°C)
Storage Temperature Range	-4°F to 158°F (-20°C to 70°C)
Housing Material	Stainless Steel 316
Wetted Finish	Ra 32 max., Ra 20 max. (optional)
Lens	Plastic Polycarbonate (Standard) or Glass
Probe Material	304 Stainless Steel
Weight	12 oz., Varies by Configuration
Environmental Protection	NEMA 4X/IP67
Power	1 x 3.6V AA Battery (M12 is loop powered 9-36 VDC.)
Battery Life	5 Years Minimum in Continuous Mode
Electronic Display Temperature Limit	If the temperature of the electronics in the display housing exceeds 122°F (50°C), permanent damage to the display will occur. A remote mount is recommended for high temperature applications.

SANITARY DIGITAL THERMOMETER/TRANSMITTER

HOW TO ORDER: Choose options to build a part number. For example: DTXNC1A240A-R3

DT	X	N	C	1
MODEL	**STYLE**	**4-20 mA OUTPUT LOCATION**	**PROCESS CONNECTION**	**TEMPERATURE RANGE**
DT = Digital Sanitary Thermometer	**A** = Back Connect **X** = Bottom Connect	**N** = None **S** = M12 Upper Back **T** = M12 Right Side **U** = M12 Left Side **V** = M12 Top Side **W** = M12 Bottom Side (Back Connect Style Only)	**C** = 1.5" Tri-Clamp® **L** = 2" Tri-Clamp® **A** = 2.5" Tri-Clamp® **P** = 3" Tri-Clamp® **M** = 3/4" Tri-Clamp® **K** = 4" Tri-Clamp®	

Code	Temp. Range	Decimal Point
1	-58°F to 392°F	Yes
2	-50°C to 200°C	Yes
3*	-328°F to 1112°F ⚠	No
4*	-200°C to 600°C ⚠	No

⚠ *If the temperature of the electronics in the display housing exceeds 122°F (50°C), permanent damage to the display will occur. A remote mount is recommended for high or low temperature applications.

A	240	A	-R3
STEM DIAMETER	**STEM LENGTH**	**RTD**	**OPTIONS**
Straight Stems **A** = 1/4" Dia. (Standard) **F** = 3/8" Dia. *Fast Response Stems* **B** = 3/8" Dia. Reduced to 3/16" Dia. Tip	**025** = 2.5" **040** = 4" **060** = 6" **090** = 9" **120** = 12" **150** = 15" **180** = 18" **240** = 24" **300** = 30" **360** = 36" **???** = Custom stem length in inches. *Millimeter Stem Lengths* **M????** = Use a code beginning in M to specify a mm stem length ex: 100mm = M0100	**A** = Class A RTD, 1,000Ω	**-R1** = Cal Cert, 1 point (REOTEMP Picks Point) **-R3** = Cal Cert, 3 point (REOTEMP Picks Points) **-C1** = Cal Cert, 1 point (Customer Picks Point) **-C3** = Cal Cert, 3 points (Customer Picks Points) **-GL** = Glass Lens **-TS** = Tag, Stainless **-TP** = Tag, Paper **-CL** = Custom Logo Dial *For Additional Options See Page 134* *For Thermowells See Pages 160-166*

Note: Thermowells should be used whenever the stem or bulb would be exposed to pressure, corrosion, velocity, abrasion or shear forces. Thermowells also make it possible to remove the thermometer without losing pressure or the contents of the process.

HANDHELD DIGITAL THERMOMETER

REOTEMP's Handheld Digital Thermometer is a multi-purpose high accuracy thermometer used to spot check various process media commonly found in the brewing and food & beverage industries. The Digital Handheld Thermometer features rugged all stainless steel construction and a built-in handle for ease of handling and extra protection.

Accuracy | Custom Logo | Made in the USA

FEATURES / BENEFITS

- 3" Dial with Plastic (Polycarbonate) Lens
- Easy-to-Read 4 Digit LCD Display with Decimal Point
- High Accuracy Class A RTD
- Water Resistant IP67/NEMA 4X
- Rugged All Stainless Steel Construction
- Fast Response Stem

SPECIFICATIONS

Accuracy	± (0.72 + 0.002 x | t-32 |) °F, ± (0.42 + 0.002 x | t |) °C, where t = temperature. Example: At 32°F accuracy is ± 0.72 °F.
Sensing Element	RTD, Type Pt1000Ω, Class A
Temperature Ranges	-58°F to 392°F (-50°C to 200°C) or -328°F to 1112°F (-200°C to 600°C)
Refresh Rate	3 Seconds
Display	4-digit LCD, 1/2" Height
Display Resolution	See Table 1
RFI Effect	1% or Less Typical
Temperature Effect	32°F to 122°F (0°C to 50°C)
Storage Temperature Range	-4°F to 158°F (-20°C to 70°C)
Housing Material	Stainless Steel 316
Lens	Plastic Polycarbonate (Standard) or Glass
Probe Material	304 Stainless Steel
Weight	12 oz., Varies by Configuration
Environmental Protection	NEMA 4X/IP67
Power	1 x 3.6V AA Battery (M12 is loop powered 9-36 VDC.)
Battery Life	5 Years Minimum in Continuous Mode
Electronic Display Temperature Limit	If the temperature of the electronics in the display housing exceeds 122°F (50°C), permanent damage to the display will occur. A remote mount is recommended for high temperature applications.

Table 1: Display Resolution

Model	Range	Decimal Point
Low Temp, Displays Decimal	-58°F to 392°F (-50C to 200C)	Yes
High Temp, No Decimal	-328°F to 1112°F (-200°C to 600°C)	No

HANDHELD DIGITAL THERMOMETER

HOW TO ORDER: Choose options to build a part number. For example: BTA11B360A

BT	A	1	1	B
MODEL	**STYLE**	**CONNECTION**	**TEMP RANGE**	**STEM DIAMETER**
BT = Digital Handheld Thermometer with Bezel Head and Stainless Handle	**A** = Back Connect	**1** = 1/2" NPT		**B** = 3/8" Stem with Fast Response 3/16" Tip

Code	Temp. Range	Decimal Point
1	-58°F to 392°F	Yes
2	-50°C to 200°C	Yes
3	-328°F to 1112°F	No
4	-200°C to 600°C	No

360	A	
STEM LENGTH	**RTD**	**OPTIONS**
120 = 12" Stem **240** = 24" Stem **360** = 36" Stem **480** = 48" Stem **600** = 60" Stem **720** = 72" Stem **840** = 84" Stem **960** = 96" Stem **???** = Custom stem length in inches. *Millimeter Stem Lengths* **M????** = Use a code beginning in M to specify a mm stem length ex: 100mm = M0100	**A** = Class A 1000Ω RTD	**-CL** = Custom Logo Dial **-R1** = Cal Cert, 1 point (REOTEMP Picks Point) **-R3** = Cal Cert, 3 point (REOTEMP Picks Points) **-C1** = Cal Cert, 1 point (Customer Picks Point) **-C3** = Cal Cert, 3 points (Customer Picks Points) **-GL** = Glass Lens **-TS** = Tag, Stainless **-TP** = Tag, Paper *For Additional Options See Page 139*

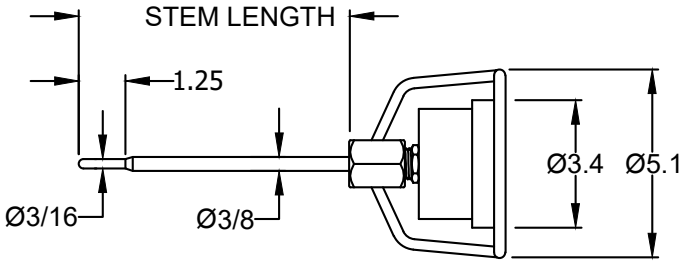

All dimensions are in inches.

SMALL DIAL BIMETAL THERMOMETERS

REOTEMP's OEM Thermometers are the perfect choice for equipment with limited space that requires a rugged, dependable, and economical temperature sensor. These thermometers are also available with a wide variety of mounting threads.

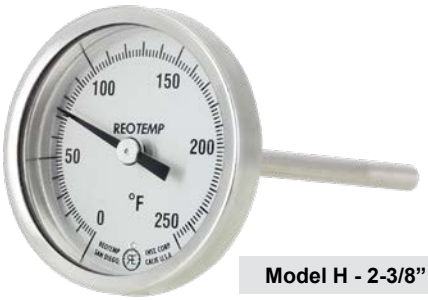

Model H - 2-3/8" (2.38)

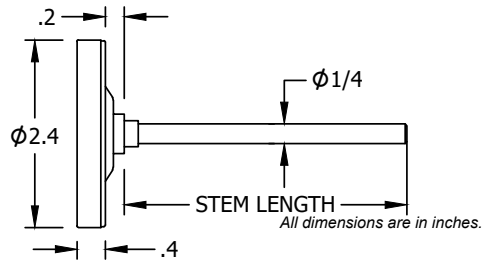

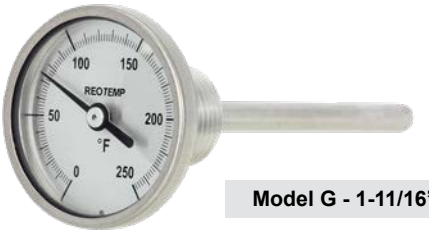

Model G - 1-11/16" (1.68)

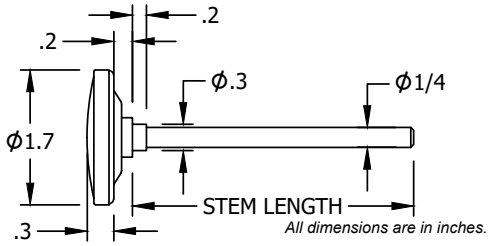

Model Q - 1-5/32" (1.16)

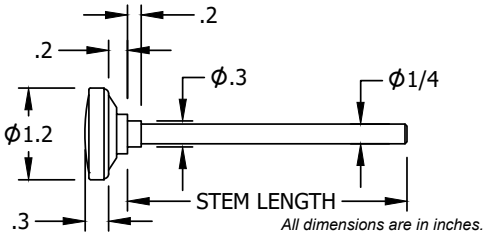

Accuracy Custom Logo Made in the USA ASME B40.3

FEATURES / BENEFITS

- Made to ASME B40.3 Specifications
- Accuracy ± 1% Full Scale. (ASME B40.3)
- Standard External Reset
- One Year Warranty
- Made in the USA
- All-Stainless Steel Construction

SPECIFICATIONS

Accuracy	± 1% Full Scale (ASME B40.3)
Dial Size	1-5/32" (1.16), 1-11/16" (1.68), 2-3/8" (2.38)
Dial Material	Black marks on satin matte aluminum finish, or White Dial
Stem Length	2" to 80"
Stem Diameter	1/4" or 5/16"
Head, Bezel, Mounting Bushing, Stems	300 Series SS, 316SS (Optional)
Operating Conditions	Head temperature should not exceed 200°F. Stem should not be exposed to continuous temperatures exceeding 50% over-range or 800°F.
Environmental Protection	IP67, NEMA 6 Rated
Lens	Glass (Standard), Acrylic, or Polycarbonate
Immersion	Minimum 2" in liquid, and 4" in gas for most ranges. Certain ranges require up to 4" in liquids & 5" in gas.
Mounting Connection	Plain Bushing (standard), 1/2" NPT, 3/8"-24 NF (straight threaded), 1/4" NPT, 1/8" NPT, 3/8" NPT, Hex Reset Bushing
Temperature Sensing Area	Last 2" to 4" of the stem

SMALL DIAL BIMETAL THERMOMETERS

Visit reotemp.com

- ✓ Check Stock
- ✓ Configure Part #
- ✓ Get Price
- ✓ Generate a Custom Engineering Drawing

HOW TO ORDER: Choose options to build a part number. For example: QQ0251F23-PS

QQ	025	2	F23	-PS
MODELS	**STEM LENGTH**	**CONNECTION**	**TEMPERATURE RANGE**	**OPTIONS**

OEM Models
QQ = Model Q 1-5/32" (1.16) Dial
GG = Model G 1-11/16" (1.68) Dial
HH = Model H 2-3/8" (2.38) Dial

Lab & Test Models
QP = Model QP (1 5/32" Dial) with 5" Stem
GL = Model GL (1 11/16" Dial) with 8" Stem
HL = Model HL (2 3/8" Dial) with 8" Stem

025 = 2.5"
040 = 4"
060 = 6"
090 = 9"
120 = 12"
150 = 15"
180 = 18"
240 = 24"
300 = 30"
360 = 36"

Note: Intermediate stem lengths available up to 80".

Millimeter Stem Lengths
M???? = Use a code beginning in M to specify a mm stem length ex: 100mm = M0100

2 = Plain Bushing (std)
1 = 1/2" NPT
3 = 3/8" - 24 NF (straight threaded)
4 = 1/4" NPT
6 = 1/8" NPT
7 = 3/8" NPT
8 = Hex Reset Bushing

Fahrenheit Ranges
F23 = -40°F to 160°F
F55 = 25°F to 125°F*
F43 = 0°F to 200°F
F47 = 0°F to 250°F
F63 = 50°F to 300°F
F67 = 50°F to 500°F
F69 = 50°F to 550°F
F81 = 150°F to 750°F
F85 = 200°F to 1000°F

Celsius Ranges
C23 = -40°C to 70°C
C55 = 0°C to 50°C*
C43 = 0°C to 100°C
C4 = -20°C to 120°C
C59 = 0°C to 150°C
C67 = 0°C to 250°C
C69 = 0°C to 300°C
C73 = 0°C to 400°C
C85 = 100°C to 500°C

Dual Scale Ranges
D23 = -40°F to 160°F & -40°C to 70°C
D55 = 25°F to 125°F & -5°C to 50°C*
D43 = 0°F to 200°F & -10°C to 90°C
D47 = 0°F to 250°F & -20°C to 120°C
D63 = 50°F to 300°F & 10°C to 150°C
D67 = 50°F to 500°F & 10°C to 260°C
D69 = 50°F to 550°F & 10°C to 290°C
D81 = 150°F to 750°F & 70°C to 400°C
D85 = 200°F to 1000°F & 100°C to 500°C

*Not available in 2.5" stem.

For Additional Ranges See Master Range Code Sheet on Page 141

General Options (Choose up to 4)
-PS = Pointed Stem
-SS = 316 Stainless Stem
-CL = Custom Logo Dial

Window Options (Std. is glass)
-PC = Acrylic Window

Calibration Cert. Options
-R1 = One Point Calibration Cert (REOTEMP Chooses Points)
-R3 = Three Point Calibration Cert (REOTEMP Chooses Points)

For Additional Options See Page 139

For Thermowells See Pages 160-166

Note: Thermowells should be used whenever the stem or bulb would be exposed to pressure, corrosion, velocity, abrasion or shear forces. Thermowells also make it possible to remove the thermometer without losing pressure or the contents of the process.

REOTEMP's Laboratory Thermometers (QP, GL & HL) are ideal for testing and spot checking local temperatures in a variety of critical process or lab applications. Pointed stems are available for insertion in semi-solids such as soil, meat, etc.

Lab Model QP with 1.2" Dial (with point - Model QPP)

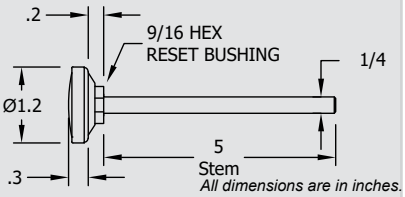

Lab Model GL with 1.7" Dial (with point - Model QLP)

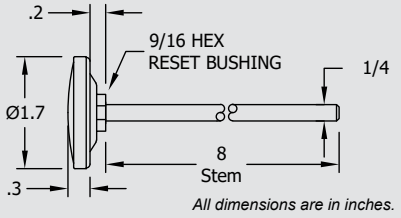

Lab Model HL with 2.4" Dial (with point - Model HLP)

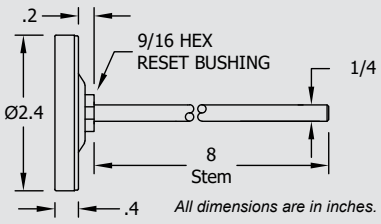

THERMOMETERS

DIAL INDICATING THERMOMETER OPTIONS

		Industrial	Small Dial OEM	Digital	Dual Mode Thermometer
Part #	Description	AA, RR, CC, CN, BB, SS, XR, XX, YY, YN, VR, VV, LL, MM, JJ	QQ, GG, HH	DT, DTR, BT	DMT
CASE FILL OPTIONS					
-SF	Silicone Filled Case	✓	N/A	N/A	✓
LENS OPTIONS					
-PC	Acrylic Window	✓	✓	N/A	✓
-PY	Polycarbonate Window	✓	✓	STD	✓
-TG	Tempered Safety Glass Lens	✓	N/A	N/A	✓
-SG	Laminated Safety Glass Lens	✓	N/A	N/A	✓
-GL	Plain Glass	STD	STD	✓	STD
STEM OPTIONS					
-PS	Pointed Tip	✓	✓	✓	N/A
-SS	316 Stainless Steel Stem	✓	✓	✓	✓
-F5	5/16" Diameter Stem (Not Available with 316SS Stem)	✓	✓	✓	N/A
-S3	3/8" Diameter Stem	✓	✓	✓	✓
-TF	Teflon Coating (Stem Only)	✓	✓	✓	✓
DIAL OPTIONS					
-CL	Custom Logo Dial	✓	✓	✓	✓
-HV	Hi-Vis Dial	✓	MQ	N/A	✓
-CB	Color Band	✓	MQ	N/A	✓
-CP	Color Pie	✓	MQ	N/A	✓
-WD	White Dial (Standard Ranges Only)	✓	✓	✓	✓
-MM	Min/Max Pointer	✓	N/A	N/A	✓
NL	No Logo	✓	✓	✓	✓
TAG OPTION					
-TS	Stainless Steel Tag (1-10 Characters)	✓	✓	✓	✓
-TP	Paper Tag	✓	✓	✓	✓
CERTIFICATION OPTIONS					
-R1	1pt. Calibration Certification (REOTEMP Chooses the Point)	✓	✓	✓	✓
-R3	3 pt. Calibration Certification (REOTEMP Chooses the Points)	✓	✓	✓	✓
-C1	1 pt. Calibration Certification (Customer Chooses the Point)	✓	✓	✓	✓
-C3	3 pt. Calibration Certification (Customer Chooses the Points)	✓	✓	✓	✓
-CS	NIST Calibration Sticker (No Logged Points)	✓	✓	✓	✓
-CC	Certificate of Conformance	✓	✓	✓	✓
OTHER					
-3H	316 Stainless Steel Head & Bezel	✓	N/A	STD	✓
-HT	Heat Transfer Compound	✓	✓	✓	✓
-CH	Spring Handle (T-27)	✓	✓	✓	N/A
-AS	Allows Bimet to Fit 1-1/4-18 Industrial Thermowell	✓	✓	✓	✓
-EH	Explosion Proof Head	N/A	N/A	✓	✓

✓	Indicates that the option is available with the model.	N/A	Indicates the option is not available with this model.
STD	Indicates standard options with no additional cost.	MQ	Minimum order quantity applies.

BIMETAL OPTIONS

YouTube Visit reotemp.com/youtube

- ✓ In-depth Videos on our Customization Options
- ✓ Product Demonstration Videos

Hi Vis™

REOTEMP's Hi-Vis™ dial increases the visibility of dials in low-light environments and from a distance. Hi-Vis™ dials are often used in areas where readings are paramount to safety. They can also be used to differentiate between two different process lines within a facility.

-HV	Hi-Vis™ High Visibility Dial
Availability	Process Grade Thermometers

Hi-Vis™

COLOR BANDS & COLOR PIES

Color bands and pies highlight a specific range on the gauge so that it is immediately apparent if the process falls within a critical temperature range.

-CB	Color Band (Specify Colors and Ranges)
-CP	Color Pie (Specify Colors and Ranges)
Availability	Process Grade Thermometers

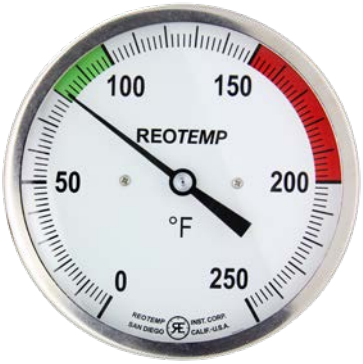

Color Band

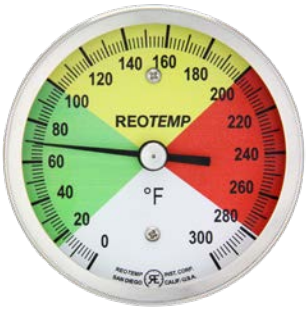

Color Pie

CUSTOM LOGO DIAL

Thermometer dials offer a unique opportunity to communicate critical information, highlight installation specifications, or promote an OEM or end-user brand.

-CL	Custom Logo Dial
Availability	All Dial Indicating Thermometers.

Custom Logo

DIAL MARKING

Add text, a serial number, tag number, equipment class, or other text to the thermometer dial face.

-DM	Dial Marking
Availability	All Dial Indicating Thermometers.

Min-Max Pointer with Color Bands

BIMETAL TEMPERATURE RANGE CODE MASTER LIST

FAHRENHEIT RANGES		
Code	°F Range	Div.
F03	-100/100	2
F05	-100/200	2
F07	-80/120	2
F11	-70/150	2
F19	-50/300	5
F21†	-40/120	2
F23	-40/160	2
F25	-40/180	2
F26	-40/200	2
F27‡	-40/70	1
F31†	-20/120	2
F33	-20/425	5
F35‡	0/100	1
F37†	0/140	2
F39†	0/150	1
F43	0/200	2
F45	0/220	2
F47	0/250	2
F49	0/300	2
F50	0/500	5
F51	0/600	10
F53	20/240	2
F55‡	25/125	1
F57‡	30/130	1
F63	50/300	2
F65	50/400	5
F67	50/500	5
F69	50/550	5
F71	50/650	10
F73	50/750	10
F78	100/600	5
F79	100/800	10
F81	150/750	10
F82	200/700	20
F83	200/300	2
F84	100/900	5
F85	200/1000	10
F89	250/600	5
F91	300/400	2
F92	0/1200	2

CELSIUS RANGES		
Code	°C Range	Div.
C01	-80/220	2
C03	-70/70	2
C06	-70/30	1
C07	-50/50	1
C08	-60/120	2
C09‡	-50/0	1
C15	-50/100	2
C17	-50/200	2
C19	-40/160	2
C20	-60/300	5
C23	-40/70	1
C24	-40/350	5
C27‡	-30/30	1
C31‡	-20/40	1
C32	-20/60	
C33	-20/220	2
C34	-20/320	5
C35‡	0/30	.5
C37‡	0/60	1
C38†	0/80	
C43	0/100	1
C47	-20/200	2
C53	-10/110	1
C55‡	0/50	.5
C56	0/120	1
C59	0/150	1
C60	50/150	
C61	0/160	2
C63	10/150	2
C65	0/200	2
C67	0/250	2
C69	0/300	2
C71	0/300	5
C73	0/400	5
C74	0/450	5
C75	0/500	5
C79	50/450	5
C81	50/400	5
C85	100/500	5
C87	100/550	5

DUAL RANGES	
Code	°F & °C Range
D01	-150/400 & 100/200
D03	-100/100 & -70/40
D07	-80/120 & -60/50
D15	-50/210 & -50/100
D19	-50/300 & -40/160
D23	-40/160 & -40/70
D37†	0/140 & -15/60
D39†	0/150 & -20/65
D41†	0/160 & -15/70
D43	0/200 & -10/90
D45	0/220 & -10/100
D47	0/250 & -20/120
D49	0/300 & -10/150
D53	20/240 & -10/115
D55‡	25/125 & -5/50
D63	50/300 & 10/150
D65	50/400 & 10/200
D67	50/500 & 10/260
D69	50/550 & 10/290
D77	100/450 & 40/230
D79	100/800 & 40/400
D81	150/750 & 70/400
D85	200/1000 & 100/500
D87	200/1000 & 100/550

‡ Minimum stem length is 4”.
† For 2.5” stem, all bottom connect and all-angle models require adapter P/N AD22S.

SURFACE THERMOMETER

The REOTEMP Surface Bimetal Thermometer measures temperature on any horizontal surface. The magnetic feet on this model snap it securely to any ferrous surface. It is commonly used on griddles, ovens, motors, piping and tanks.

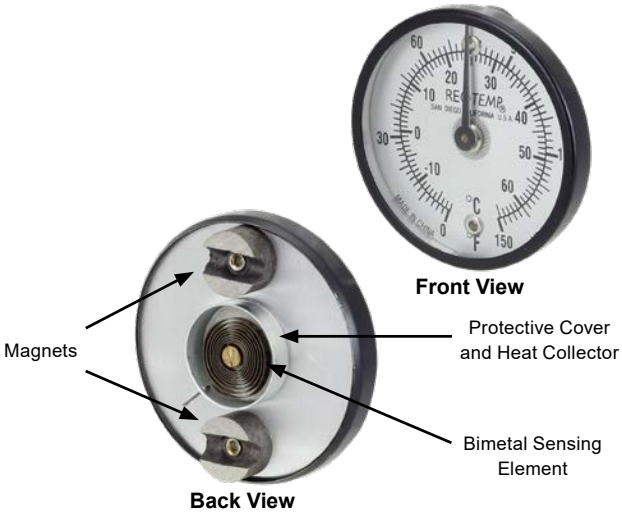

SPECIFICATIONS

Accuracy	± 2% Full Scale
Sensing Element	Precision Calibrated Bimetal Coil
Dial Size	2” (5.08cm)
Dial Material	Aluminum background with black marks.
Case	Aluminum
Lens	Glass
Height	1/2” (1.27cm)
Weight	Approximately 2 ounces (56.7g)
Response Time	Approximately 1 minute.
Mounting	Two magnets on back.

TEMPERATURE RANGE — **SUR-15**

HOW TO ORDER

SUR-15 = 0 to 150°F & -20 to 65°C
SUR-25 = 0 to 250°F & -20 to 120°C
SUR-50 = 0 to 500°F & -20 to 260°C
SUR-75 = 50 to 750°F & 10 to 400°C

POCKET BIMETAL THERMOMETER

K-79 Analog Dial Model

FEATURES / BENEFITS

- Accurate and Rugged
- Quick Response
- Shock Resistant
- Sensitive Bimetal Element
- External Reset Adjustment
- Waterproof and Dust Proof
- Stainless Steel or Plastic Pocket Case

SPECIFICATIONS

Accuracy	± 2% Full Scale
Dial Size	1” Diameter (25mm)
Dial Material	White background with crisp letters, marks, and numbers.
Stem Length	142 O.D., 5” long, pointed (36mm x 127mm)
Pocket Case	Plastic with clip and holder loop.
Lens	Glass
Reset Nut	7/16 Hex (11mm)
Weight	0.65 Ounces (18.5g)
Packed	1 per box, 12 per carton

TEMPERATURE RANGE — **K-79-2**

HOW TO ORDER

Fahrenheit Ranges
K-79-2 = -40°F to 160°F
K-79-3 = 0°F to 220°F
K-79-4 = 25°F to 125°F
K-79-5 = 50°F to 550°F

Celsius Ranges
K-79-7 = -10°C to 110°C
K-79-8 = 0°C to 150°C
K-79-9 = 0°C to 250°C

O-TEMP™ BIMETAL THERMOMETERS

REOTEMP's O-TEMP Bimetal Thermometers are reliable and accurate temperature sensors requiring no electricity or wiring. The O-TEMP line is designed for OEM applications in a variety of industrial applications where a more economical option is needed. They can be recalibrated with a turn of the calibration screw on the back of the dial. A variety of options are available for your specific process needs.

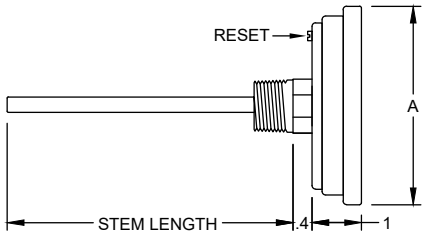

All dimensions are in inches.

Model	Dial Size	Connection	A
AO	3"	1/2" NPT	3.3"
CO	4"	1/2" NPT	4.3"
BO	5"	1/2" NPT	5.3"

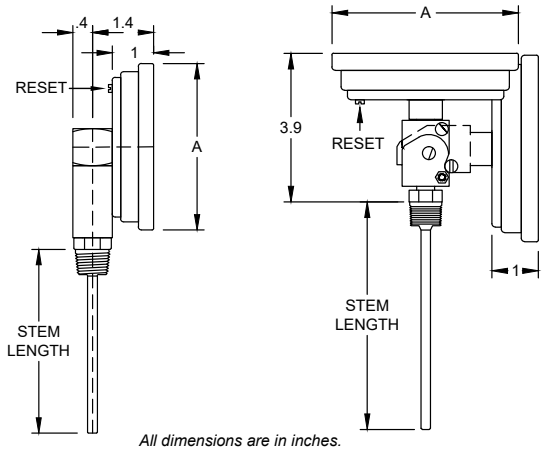

All dimensions are in inches.

Model	Dial Size	Connection	**A**
XO	3"	1/2" NPT	3.3"
YO	4"	1/2" NPT	4.3"
VO	5"	1/2" NPT	5.3"

Model	Dial Size	Connection	A
LO	3"	1/2" NPT	3.3"
MO	4"	1/2" NPT	4.3"
JO	5"	1/2" NPT	5.3"

FEATURES / BENEFITS

- All-Stainless Construction
- Hermetically Sealed
- Standard External Reset for Easy Calibration
- One Year Warranty

SPECIFICATIONS

Accuracy	Back and Adjustable: ± 1.5% Full Scale Bottom: ± 2% Full Scale
Dial Size	3", 4" or 5"
Dial Material	White background with black marks.
Stem Length	2" to 36"
Stem Diameter	1/4"
Head, Bezel, Mounting Bushing, Stems	304SS
Operating Conditions	Head temperature should not exceed 200°F. Stem should not be exposed to continuous temperatures exceeding 50% over-range or 800°F.
Environmental Protection	IP65, Hermetically Sealed
Lens	Glass (Standard), Acrylic, Polycarbonate, Tempered Glass, or Laminated Safety Glass
Immersion	Minimum 2" in liquid, and 4" in gas for most ranges. Certain ranges require up to 4" in liquids & 5" in gas.
Mounting Connection	1/2" NPT (Standard), 1/4" NPT, or 1/2" BSPT
Temperature Sensing Area	Last 2" to 4" of the stem

O-TEMP™ BIMETAL THERMOMETERS

MODELS TYPICALLY IN STOCK		
3" Dial, Back Connect, 1/2" NPT		
	0/250°F	50/550°F
2.5" Stem	AO0251F47	AO0251F69
4" Stem	AO0401F47	AO0401F69
6" Stem	AO0601F47	AO0601F69
9" Stem	AO0901F47	AO0901F69
12" Stem	AO1201F47	
5" Dial, Adjustable Angle, 1/2" NPT		
	0/250°F	50/550°F
2.5" Stem	JO0251F47	JO0251F69
4" Stem	JO0401F47	JO0401F69
6" Stem	JO0601F47	JO0601F69
9" Stem	JO0901F47	JO0901F69

CUSTOM ORDER (MINIMUM QUANTITIES MAY APPLY)

HOW TO ORDER: Choose options to build a part number. For example: AO0251F23

AO | **025** | **1** | **F23**

DIAL SIZE & STYLE

Back Connect
AO = 3" Dial w/ Reset
CO = 4" Dial w/ Reset
BO = 5" Dial w/ Reset

Adjustable Angle
LO = 3" Dial w/ Reset
MO = 4" Dial w/ Reset
JO= 5" Dial w/ Reset

Bottom Connect
XO = 3" Dial w/ Reset
YO = 4" Dial w/ Reset
VO = 5" Dial w/ Reset

STEM LENGTH

025 = 2.5"
040 = 4"
060 = 6"
090 = 9"
120 = 12"
150 = 15"
180 = 18"
240 = 24"
300 = 30"
360 = 36"

Note: Intermediate stem lengths available up to 80".

CONNECTION

1 = 1/2" NPT
4 = 1/4" NPT
B = 1/2" BSPT

TEMPERATURE RANGE

Fahrenheit Ranges
F23 = -40°F to 160°F
F47 = 0°F to 250°F
F69 = 50°F to 550°F

Celsius Ranges
C43 = 0°C to 100°C
C69 = 0°C to 300°C

For Additional Custom Ranges See Master Range Code Sheet on 141

Note: Thermowells should be used whenever the stem or bulb would be exposed to pressure, corrosion, velocity, abrasion or shear forces. Thermowells also make it possible to remove the thermometer without losing pressure or the contents of the process.

REMOTE DIGITAL THERMOMETER/TRANSMITTER

REOTEMP's Remote Digital Thermometer/Transmitter is a high accuracy thermometer with digital display. It features an IP67/ NEMA 4X enclosure and a 5 year battery life. The Remote Digital is perfect for a variety of markets and applications where a high accuracy digital readout is required.

Accuracy | Custom Logo | Made in the USA

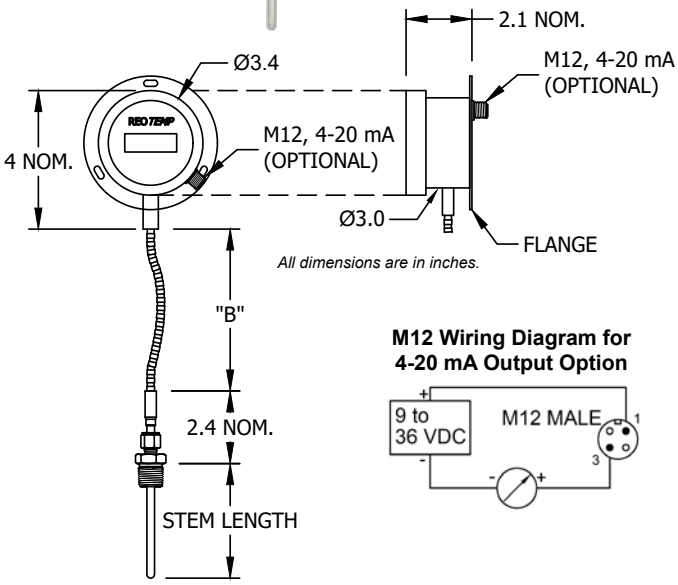

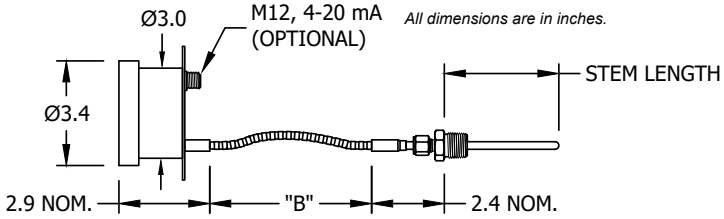

Table 1: Display Resolution

Model	Range	Decimal Point
Low Temp, Displays Decimal	-58°F to 392°F (-50C to 200C)	Yes
High Temp, No Decimal	-328°F to 1112°F (-200°C to 600°C)	No

FEATURES / BENEFITS

- High Accuracy 1,000Ω RTD (Class A)
- Water Resistant IP67/NEMA 4X
- 5 Year Battery Life
- 4-20 mA Output Available
- Low or High Temperature Range Models

SPECIFICATIONS

Accuracy	± (0.72 + 0.002 x | t-32 |) °F, ± (0.42 + 0.002 x | t |) °C, where t = temperature. Example: At 32°F accuracy is ± 0.72 °F.
Sensing Element	RTD, Type Pt1000Ω, Class A
Temperature Ranges	-58°F to 392°F (-50°C to 200°C) or -328°F to 1112°F (-200°C to 600°C)
Output (Optional)	4-20 mA, M12 Connector
Refresh Rate	3 Seconds
Display	4-digit LCD, 1/2" Height
Display Resolution	See Table 1
RFI Effect	1% or Less Typical
Ambient Temperature Range	32°F to 122°F (0°C to 50°C)
Housing Material	Stainless Steel 316
Lens	Plastic Polycarbonate (Standard) or Glass
Probe Material	304 Stainless Steel
Weight	12 oz., Varies by Configuration
Environmental Protection	NEMA 4X/IP67
Power	1 x 3.6V AA Battery (M12 is loop powered 9-36 VDC.)
Battery Life	5 Years Minimum in Continuous Mode
Electronic Display Temperature Limit	If the temperature of the electronics in the display housing exceeds 122°F (50°C), permanent damage to the display will occur. A remote mount is recommended for high or low temperature applications.

REMOTE DIGITAL THERMOMETER/TRANSMITTER

HOW TO ORDER: Choose options to build a part number. For example: DTRBXTA01013A240A-R3

DTR	B	X	T	A	010	1
MODEL	MOUNTING	CAPILLARY LOCATION	4-20 mA OUTPUT LOCATION	CAPILLARY TYPE	CAPILLARY LENGTH "B"	PROCESS CONNECTION
DTR = Digital Remote Reading Thermometer	**B** = Back Flange **F** = Front Flange **M** = Rear Mounting Bracket	**A** = Lower Back Connect **X** = Bottom Connect	**N** = None **S** = M12 Upper Back **T** = M12 Right Side **U** = M12 Left Side **V** = M12 Top Side **W** = M12 Bottom Side (Back Connect Style Only)	**A** = Stainless Steel Armor **V** = Stainless Steel Overbraid **P** = Stainless Steel Armor with PVC Coating **T** = Stainless Steel Armor With Teflon Coating	**???** = Enter Length in Feet. Example: 010 = 10 feet of Capillary.	**1** = 1/2" NPT Sliding Compression Fitting (Fits Standard Thermowell) **4** = 1/4" NPT Sliding Compression Fitting (1/4" or 1/8" Dia. Stem) **8** = 1/8" NPT Sliding Compression Fitting (1/8" Dia. Stem Only) **5** = 3/4" NPT Adaptor **U** = 1/2" NPT Union (Fits Std. Thermowell) **X** = Plain Unthreaded Bushing

3	A	240	A	-R3
TEMPERATURE RANGE	STEM DIAMETER	STEM LENGTH	RTD	OPTIONS

Code	Temp. Range	Decimal Point
1	-58°F to 392°F	Yes
2	-50°C to 200°C	Yes
3*	-328°F to 1112°F ⚠	No
4*	-200°C to 600°C ⚠	No

⚠ *If the temperature of the electronics in the display housing exceeds 122°F (50°C), permanent damage to the display will occur. A remote mount is recommended for high or low temperature applications.

Straight Stems
A = 1/4" Dia. (Standard)
F = 3/8" Dia.
C = 1/8" Dia.

Fast Response Stem (Not Intended for Use with a Thermowell)
B = 3/8" Dia. Reduced to 3/16" Dia. Tip

025 = 2.5"
040 = 4"
060 = 6"
090 = 9"
120 = 12"
150 = 15"
180 = 18"
240 = 24"
300 = 30"
360 = 36"
??? = Custom stem length in inches.

Millimeter Stem Lengths
M???? = Use a code beginning in M to specify a mm stem length ex: 100mm = M0100

A = Class A RTD, 1,000Ω

-R1 = Cal Cert, 1 point (REOTEMP Picks Point)
-R3 = Cal Cert, 3 point (REOTEMP Picks Points)
-C1 = Cal Cert, 1 point (Customer Picks Point)
-C3 = Cal Cert, 3 points (Customer Picks Points)
-GL = Glass Lens
-TS = Tag, Stainless
-TP = Tag, Paper
-EH = Explosion Proof Head FM, CSA, ATEX, & IECEx Approved, Bottom Connection Only
-CL = Custom Logo Dial

For Additional Options See Page 139

For Thermowells See Pages 160-166

Note: Thermowells should be used whenever the stem or bulb would be exposed to pressure, corrosion, velocity, abrasion or shear forces. Thermowells also make it possible to remove the thermometer without losing pressure or the contents of the process.

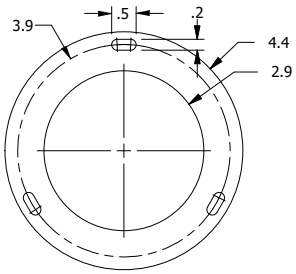

Flange Drawing

EH Explosion Proof Head

EH Head Approvals: FM Approved Enclosure Only: CL. I. GR. A,B,C,D; CL. II. GR E,F,G; CL. III.; Type 4X. For CSA Class I, Group A, conduit seal is required within 18 inches. CL. I, ZONE 1, ATEX: d IIC, IP66. ATEX: II 2GD Ex d tD A21 IIC, FTZU 04 ATEX 0265U. IECEx FMG 06.0003U, Ex d II C, IP68.

SANITARY REMOTE DIGITAL THERMOMETER/TRANSMITTER

REOTEMP's Sanitary Remote Digital Thermometer/Transmitter is a high accuracy thermometer with digital display. It features an IP67/NEMA 4X enclosure, clean-in-place connection, and a 5 year battery life. The Digital Thermometer is perfect for brewing, food, beverage and pharmaceutical applications where a high accuracy digital readout is required.

Certified

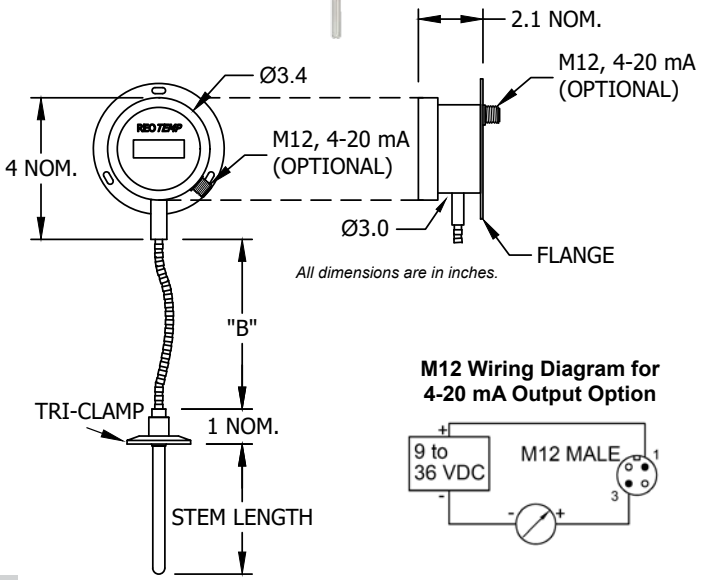

M12 Wiring Diagram for 4-20 mA Output Option

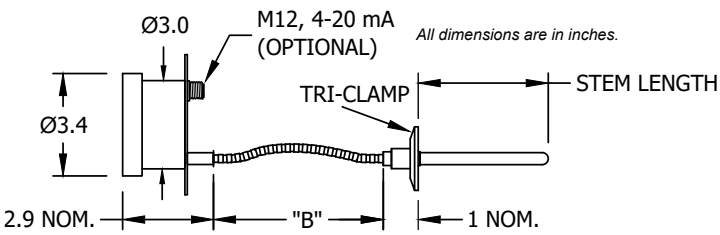

Table 1: Display Resolution

Model	Range	Decimal Point
Low Temp, Displays Decimal	-58°F to 392°F (-50C to 200C)	Yes
High Temp, No Decimal	-328°F to 1112°F (-200°C to 600°C)	No

Accuracy Custom Logo Made in the USA

FEATURES / BENEFITS

- 3-A Conformance Certificate Included
- High Accuracy 1,000Ω RTD (Class A)
- Water Resistant IP67/NEMA 4X
- 5 Year Battery Life
- 4-20 mA Output Available
- Low or High Temperature Range Models

SPECIFICATIONS

Accuracy	± (0.72 + 0.002 x | t-32 |) °F, ± (0.42 + 0.002 x | t |) °C, where t = temperature. Example: At 32°F accuracy is ± 0.72 °F.
Sensing Element	RTD, Type Pt1000Ω, Class A
Temperature Ranges	-58°F to 392°F (-50°C to 200°C) or -328°F to 1112°F (-200°C to 600°C)
Output (Optional)	4-20 mA, M12 Connector
Refresh Rate	3 Seconds
Display	4-digit LCD, 1/2" Height
Display Resolution	See Table 1
RFI Effect	1% or Less Typical
Temperature Effect	32°F to 122°F (0°C to 50°C)
Storage Temperature Range	-4°F to 158°F (-20°C to 70°C)
Housing Material	Stainless Steel 316
Lens	Plastic Polycarbonate (Standard) or Glass
Probe Material	304 Stainless Steel
Weight	12 oz., Varies by Configuration
Environmental Protection	NEMA 4X/IP67
Power	1 x 3.6V AA Battery (M12 is loop powered 9-36 VDC.)
Battery Life	5 Years Minimum in Continuous Mode
Electronic Display Temperature Limit	If the temperature of the electronics in the display housing exceeds 122°F (50°C), permanent damage to the display will occur. A remote mount is recommended for high temperature applications.

SANITARY REMOTE DIGITAL THERMOMETER/TRANSMITTER

HOW TO ORDER: Choose options to build a part number. For example: DTRBXTA010C1A240A-R3

DTR	B	X	T	A	010	C
MODEL	MOUNTING	CAPILLARY LOCATION	4-20 mA OUTPUT LOCATION	CAPILLARY TYPE	CAPILLARY LENGTH "B"	PROCESS CONNECTION
DTR = Digital Remote Reading Thermometer	**B** = Back Flange **F** = Front Flange **M** = Rear Mounting Bracket	**A** = Lower Back Connect **X** = Bottom Connect	**N** = None **S** = M12 Upper Back **T** = M12 Right Side **U** = M12 Left Side **V** = M12 Top Side **W** = M12 Bottom Side (Back Connect Style Only)	**A** = Stainless Steel Armor **V** = Stainless Steel Overbraid **P** = Stainless Steel Armor with PVC Coating **T** = Stainless Steel Armor With Teflon Coating	**???** = Enter Length in Feet. Example: 010 = 10 feet of Capillary.	**C** = 1.5" Tri-Clamp® **L** = 2" Tri-Clamp® **A** = 2.5" Tri-Clamp® **P** = 3" Tri-Clamp® **M** = 3/4" Tri-Clamp® **K** = 4" Tri-Clamp®

1	A	240	A	-R3
TEMPERATURE RANGE	STEM DIAMETER	STEM LENGTH	RTD	OPTIONS

Code	Temp. Range	Decimal Point
1	-58°F to 392°F	Yes
2	-50°C to 200°C	Yes
3*	-328°F to 1112°F ⚠	No
4*	-200°C to 600°C ⚠	No

⚠*If the temperature of the electronics in the display housing exceeds 122°F (50°C), permanent damage to the display will occur. A remote mount is recommended for high or low temperature applications.

Straight Stems
A = 1/4" Dia. (Standard)
F = 3/8" Dia.

Fast Response Stems
B = 3/8" Dia. Reduced to 3/16" Dia. Tip

025 = 2.5"
040 = 4"
060 = 6"
090 = 9"
120 = 12"
150 = 15"
180 = 18"
240 = 24"
300 = 30"
360 = 36"
??? = Custom stem length in inches.

Millimeter Stem Lengths
M???? = Use a code beginning in M to specify a mm stem length ex: 100mm = M0100

A = Class A RTD, 1,000Ω

-R1 = Cal Cert, 1 point (REOTEMP Picks Point)
-R3 = Cal Cert, 3 point (REOTEMP Picks Points)
-C1 = Cal Cert, 1 point (Customer Picks Point)
-C3 = Cal Cert, 3 points (Customer Picks Points)
-GL = Glass Lens
-TS = Tag, Stainless
-TP = Tag, Paper
-CL = Custom Logo Dial

For Additional Options See Page 139

For Thermowells See Pages 160-166

Note: Thermowells should be used whenever the stem or bulb would be exposed to pressure, corrosion, velocity, abrasion or shear forces. Thermowells also make it possible to remove the thermometer without losing pressure or the contents of the process.

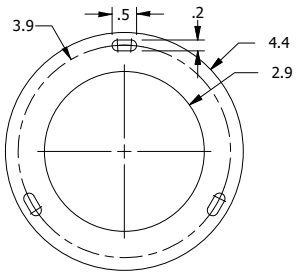

Flange Drawing

VAPOR ACTUATED THERMOMETER

REOTEMP's Vapor Actuated Thermometers can be fitted into a large variety of temperature indicating applications. Manufactured to the highest standards, these instruments are ideal for remote reading. Vapor actuated thermometers, are not subject to indicator error due to ambient temperature variations along the capillary tube system, and will give excellent readings provided the measured temperature is above or below ambient temperature.

Note: Vapor instruments have progressive non-linear graduations, and are best read in the upper 2/3 of the dial range. Many ranges are available between -40°F and +350°F, and care should be exercised to select a range that will locate the operating temperatures within the upper 2/3 of the dial range.

Note: Thermowells should be used whenever the stem or bulb would be exposed to pressure, corrosion, velocity, abrasion or shear forces. Thermowells also make it possible to remove the thermometer without losing pressure or the contents of the process.

Custom Logo

Made in the USA

FEATURES / BENEFITS

- Accuracy ± 1 Scale Division (Upper 2/3 Scale)
- Ideal for Remote Reading, such as Panel Installation
- Capillary Lengths of 1 to 100 Feet
- Stainless Steel Sealed Construction
- Variety of Flanged or U-Clamp Mounting Options
- Brass and 316SS Thermowells for Vapor-Actuated Bulbs Available.

SPECIFICATIONS

Accuracy	± 1 Scale Division (Upper 2/3 Scale)
Dial Size	2", 2 1/2", 3 1/2", 4 1/2"
Ranges	Over twenty °F and °F/°C ranges available, from -40°F to 350°F. For higher temperature ranges, please call REOTEMP to inquire about gas-actuated vapor thermometers.
Case Material	All-Stainless Steel, except: VA45FL (Aluminum) and VA45TB (Phenolic)
Bulbs	Stainless Steel or Copper. Bulb O.D. 7/16" (threaded), 3/8" (plain). Bulb lengths vary from 2 1/2" to 9 1/4" depending on capillary length.
Pointer	Standard Adjustable
Lens	Polycarbonate or Glass
Process Connection	Plain Bulb, 1/2" NPT Union, 1/2" NPT sliding union on 12" bendable extension, or thermowell.
Bourdon Tube	Phosphor Bronze
Movement	Brass with Precision Gearing
Dial Material	Aluminum with white finish and black markings. Other colors available upon request.
Capillary	Copper, copper with bronze braid armor, stainless steel, stainless steel with stainless steel armor. Available lengths from 1-100ft.
Applications	Control panels, chemical processing, pipelines, food processing, OEM applications, ovens, solar heating, refrigeration, etc.

VAPOR ACTUATED THERMOMETER

HOW TO ORDER: Choose options to build a part number. For example: V20FRF23D05L2

V | **20FR** | **23** | **D**

CASE STYLE

	Part #	Dial Size	Case Material	Lens Material	Connection Location
Front Flanged (Panel Mount) 	20FR	2”	SS	Polycarbonate**	Rear
	25FR	2.5”	SS	Polycarbonate**	Rear
	35FR	3.5”	SS	Polycarbonate**	Rear
	45FR	4.5”	SS	Polycarbonate**	Rear
	45FL	4.5”	Black Aluminum	Glass*	Rear
U-Clamp 	20UR	2”	SS	Polycarbonate**	Rear
	25UR	2.5”	SS	Polycarbonate**	Rear
	35UR	3.5”	SS	Polycarbonate**	Rear
Rear Flanged (Surface Mount) 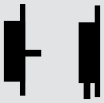 RR RB	20RR	2”	SS	Polycarbonate**	Rear
	35RR	3.5”	SS	Polycarbonate**	Rear
	35RB	3.5”	SS	Polycarbonate**	Bottom
	45RR	4.5”	SS	Polycarbonate**	Rear
	45RB	4.5”	SS	Polycarbonate**	Bottom
	45TB	4.5”	Phenolic	Glass	Bottom
Other Styles  SB	35SB	3.5”	SS	Polycarbonate**	Adjustable Bracket Mount
	45SB	4.5”	SS	Polycarbonate**	Adjustable Bracket Mount
 DA	35DA	3.5”	SS	Polycarbonate**	Direct Adjustable Mount with 3.4” Bulb & 1/2” NPT
	45DA	4.5”	SS	Polycarbonate**	Direct Adjustable Mount with 3.4” Bulb & 1/2” NPT

*Glass Lens Available, specify “Glass Lens”
**Polycarbonate Lens Available, specify “Polycarbonate Lens”
For other case styles connection locations, specify model and range only. Example: **V45DA-80**

TEMPERATURE RANGE

Fahrenheit Ranges
20 = -40°F to 60°F
30 = -40°F to 100°F
32 = -20°F to 120°F
72 = 0°F to 180°F
49 = 0°F to 150°F
80 = 20°F to 220°F
50 = 40°F to 240°F
56 = 0°F to 250°F
60 = 30°F to 300°F
†**68** = 100°F to 350°

Dual Scale Ranges
21 = -40°F to 60°F & -40°C to 15°C
31 = -40°F to 110°F & -40°C to 40°C
33 = -20°F to 120°F & -30°C to 50°C
73 = 0°F to 180°F & -20°C to 80°C
79 = 0°F to 150°F & -15°C to 65°C
81 = 20°F to 220°F & 0°C to 105°C
51 = 40°F to 240°F & 0°C to 115°C
57 = 0°F to 250°F & -20°C to 120°C
61 = 30°F to 300°F & 0°C to 150°C
†**66** = 100°F to 350°F & 40°C to 175°C

†Ranges 350°F and over come with a 316SS capillary ONLY.

CAPILLARY & BULB MATERIAL

Code	Capillary & Bulb	Capillary Protection
A	Tin Plated Copper	None
C	Copper	Bronze Braid
D	316SS	None
E	316SS	SS Armor

Need Higher Temperature Ranges? Call REOTEMP customer service to inquire about gas-actuated vapor thermometers.

05 | **L2**

CAPILLARY LENGTH IN FEET

??? = Capillary Length in Ft. (Standard Length is 5 ft.)

Capillary available in lengths 1-100 ft.

Note: Capillary Lengths over 5 feet affect bulb length see table on page 151.

PROCESS CONNECTION

Code	Connection	Material
J1	None (Plain Bulb)	N/A
J2	Jam Nut Only	Brass (For Brass Well)
J3	Jam Nut Only	Nickel Plated Brass
K2	1/2” NPT Union	Brass
L2	1/2" NPT Union	316SS
M2	1/2” Sliding Union on Bendable Extension	316SS (With 316SS Capilalry ONLY)
???	Thermowell .447 Bore	See Chart to Right

Thermowells with .447 Bore for Vapor-actuated Bulbs (Except M2)	1/2” NPT Brass	3/4” NPT Brass	1/2” NPT 316SS	3/4” NPT 316SS
(Bulb #1) 1-10 ft. Capillary	12B	13B	12S	13S
(Bulb #2) 11-25 ft. Capillary	22B	23B	22S	23S
(Bulb #3) 26-50 ft. Capillary	32B	33B	32S	33S
(Bulb #4) 51-75 ft. Capillary	42B	43B	42S	43S
(Bulb #5) 76-100 ft. Capillary	52B	53B	52S	53S

VAPOR ACTUATED THERMOMETER

Plain Bulb

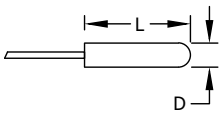

Union Connection

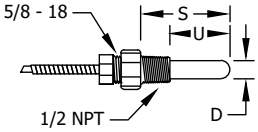

Bendable Extension

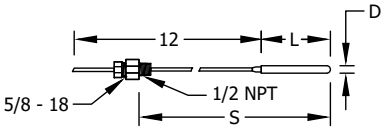

Thermowell

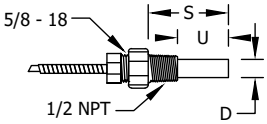

Jam Nut

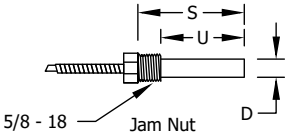

All dimensions are in inches.

STANDARD BULB DIMENSIONS

	Plain Bulb		Union Connection			Bendable Extension (Fits .385 Bore)			Thermowell		
Capillary Length	L	D	U	S	D	L	S	D	U	S	D
(Bulb #1) 1-10 ft. Capillary	2 1/2" (1-5 ft.); 3 7/16" (6-10 ft.)	3/8"	1 13/16"	2 3/8"	7/16"	2 1/2" (1-5 ft.); 3 7/16" (6-10 ft.)	3-13"; 4-14"	3/8"	1 15/16"	2 1/2"	9/16"
(Bulb #2) 11-25 ft. Capillary	3 7/16"	3/8"	1 1/2"	3 1/4"	7/16"	3 7/16"	4-14"	3/8"	2 5/8"	3 3/8"	9/16"
(Bulb #3) 26-50 ft. Capillary	4 7/8"	3/8"	4 1/2"	5 1/4"	7/16"	4 7/8"	5-15"	3/8"	4 5/8"	5 3/8"	9/16"
(Bulb #4) 51-75 ft. Capillary	7 7/8"	3/8"	6 1/2"	7 1/4"	7/16"	7 7/8"	8-18"	3/8"	6 5/8"	7 3/8"	9/16"
(Bulb #5) 76-100 ft. Capillary	10 7/8"	3/8"	8 1/2"	9 1/4"	7/16"	10 7/8"	11-21"	3/8"	8 5/8"	9 3/8"	9/16"

All dimensions are in inches.

Dial Faces
Typical dial are faces shown here. A complete list is shown on page 21. Operating temperatures should be in upper 2/3 of selected range. For temperatures above or below those shown, ask for information on REOTEMP Gas Actuated Thermometers.

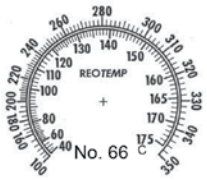

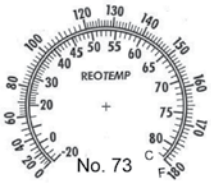

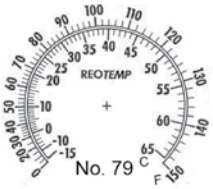

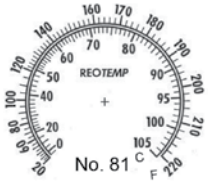

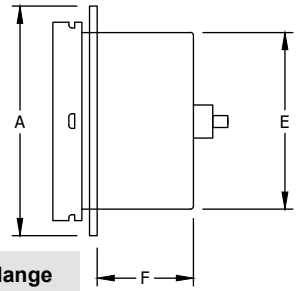

Front Flange

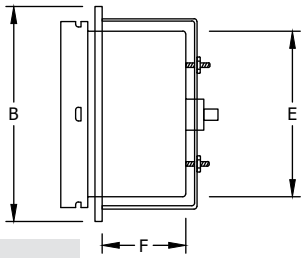

U-Clamp

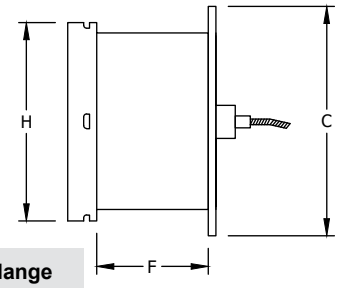

Rear Flange

CASE AND MOUNTING DIMENSIONS

Dial	A	B	C	D	E	F	G	H	J
2"	2.94"	2.25"	2.94"	1.25" R	2.05"	0.98"	1.28" R	2.3"	0.14"
2 1/2"	3.69"	2.81"	-	1.66" R	2.56"	1"	-	-	0.17"
3 1/2"	4.75"	3.97"	4.75"	2.16" R	3.59"	1.41" RF 0.75" UC, FR	2.16" R	3.69"	0.16"
4 1/2"	5.88" FR 6.31" FL	- -	5.88" RR, RB 5.83" TB	2.69" R -	4.59"	1.41" RF 0.75" UC, FF 2.56" TB 1.63" FL	2.69" R	4.69"	0.22"

All dimensions are in inches.

GAS ACTUATED THERMOMETER

REOTEMP's Gas Actuated Thermometers combine advanced gas coil technology with a state-of-the-art adsorbent-(Class IV) thermal system, producing a superior temperature measurement instrument that can be fitted to a wide variety of applications. Features include high accuracy, low ambient error, no head error, and a high degree of over-range protection. The compact (3/8" diameter x 3" active length) bulb, and a wide range of case styles and thermal systems, allow great flexibility in installation. The linear dial on all REOTEMP gas thermometers provides a consistent 1% accuracy across the full span of each range. This, combined with over twenty Fahrenheit and dual ranges, from -320°F to +1200°F, provides complete coverage of all normal temperature requirements.

Looking for Smaller Sized Dials? Call REOTEMP customer service to inquire about gas-actuated vapor thermometers.

Note: Thermowells should be used whenever the stem or bulb would be exposed to pressure, corrosion, velocity, abrasion or shear forces. Thermowells also make it possible to remove the thermometer without losing pressure or the contents of the process.

Accuracy Custom Logo Made in the USA

FEATURES / BENEFITS

- Accuracy ± 1% Full Scale
- Can Handle a Wide Temperature Range Up to 1200°F
- Wide Variety of Wall, Panel and Direct Mounting Options
- Capillary Lengths Up to 99 Feet
- OEM Logo Dials/Custom Dials
- One Year Warranty

SPECIFICATIONS

Accuracy	±1% Full Scale, Calibration to NIST Traceable Standards
Ranges	°F, °C, and Dual Scale Ranges Available from -320°F to 1200°F (-200°C to 650°C)
Overrange	Minimum 10% of span above top of range, or 1300°F (704°C), whichever is less.
Ambient Error	1/4% of Span per 25°F Change in Ambient Temperature at Midscale
Dial Size	4-1/2" & 6" Dials, White with Black Markings
Case Material	Stainless Steel, Polypropylene, or Aluminum
Case Styles	Panel Mount, Surface Mount, or Direct (stem) Mount
Bulbs	316SS, 3/8" Diameter x 3" Active Length, Other Diameters and Lengths are Available
Thermal Systems	Stainless steel capillary with stainless steel spring armor (up to 40ft). Over 40 feet, stainless steel interlock armor is standard. Direct mount stems, 316 SS, 4" to 48".
Pointer	Aluminum, Slotted Adjustable Type to Permit Zero-Set Adjustments
Lens	Glass (Standard), Safety Glass and Acrylic Options Available. Aluminum style is available with glass only.
Immersion	Minimum 2" in liquid, and 4" in gas for most ranges. Certain ranges require up to 4" in liquids & 5" in gas.
Process Connection	Plain Bulb, 1/2" NPT Union, 1/2" NPT sliding union on 12" bendable extension, or thermowell. Note: Thermowells must be used whenever the bulb would be exposed to pressure, fluid velocity, or corrosive media.

GAS ACTUATED THERMOMETER

HOW TO ORDER: Choose options to build a part number. For example: G45ER87L15FBXAW

G45ER

CASE STYLE

Mount Type	Case Type	Code	Connection	Dial	A	B	C	D	E	F	G	H
Wall Mount	Polypropylene Turret Mount (E)	G45ER	Rear	4 1/2”	5.83”	2.41”	5.08”	2.62”	1”	.2”	.24”	5.39”
		G45EL	Lower	4 1/2”	5.83”	2.41”	5.08”	2.62”	1”	.2”	.24”	5.39”
	Stainless Steel Back Flange (K)	G45KR	Rear	4 1/2”	5.88”	2.15”	5.04”	-	-	-	.22”	5.38”
		G45KL	Lower	4 1/2”	5.88”	2.15”	5.04”	-	-	-	.22”	5.38”
		G60KR	Rear	6”	7.5”	2.15”	6.38”	-	-	-	.25”	6.84”
		G60KL	Lower	6”	7.5”	2.15”	6.38”	-	-	-	.25”	6.84”
Direct Mount	Stainless Steel All-Angle Direct Mount (D)	G45DA	Adjustable	4 1/2”	5.04”	2”	-	-	1.7”	-	-	-
		G60DA	Adjustable	6”	6.38”	2.15”	-	-	1.7”	-	-	-
Panel Mount	Aluminum Front Flange Hinge Ring (F)	G45FR	Rear	4 1/2”	6.31”	1.63”	-	4.88”	-	1.35”	.19”	5.38”
		G60FR	Rear	6”	7.87”	1.59”	-	6.34”	-	1.75”	.19”	6.69”
	Stainless Steel Semi-Flush Front Flange (S)	G45SR	Rear	4 1/2”	5.88”	2.15”	5.04”	4.51”	-	1”	.22”	5.38”
		G60SR	Rear	6”	7.5”	2.15”	6.38”	5.88”	-	1”	.25”	6.84”
	Stainless Steel “U” Clamp (U)	G45UR	Rear	4 1/2”	5.04”	-	-	4.51”	-	-	-	-
		G60UR	Rear	6”	6.38”	-	-	5.88”	-	-	-	-

All dimensions are in inches.

E Polypropylene Turret Mount

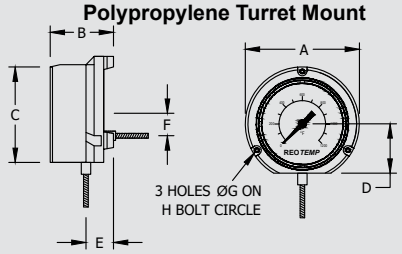

All dimensions are in inches.

K Stainless Steel Back Flange

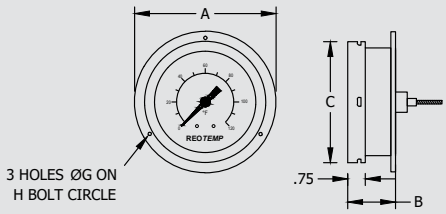

All dimensions are in inches.

D Stainless Steel All-Angle Direct Mount

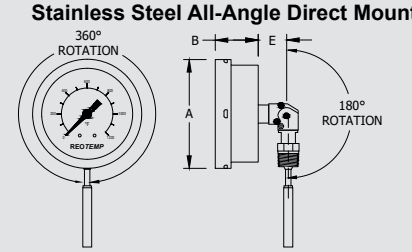

All dimensions are in inches.

F Aluminum Front Flange Hinge Ring

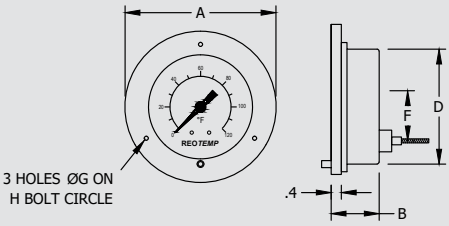

All dimensions are in inches.

S Stainless Steel Semi-Flush Front Flange

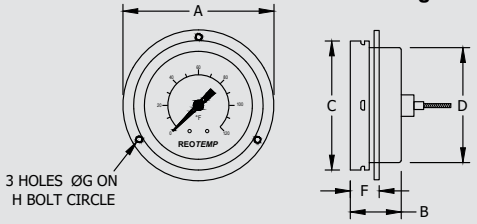

U Stainless Steel “U” Clamp

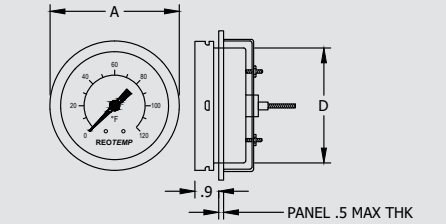

GAS ACTUATED THERMOMETER

87 — THERMAL SYSTEM

All-Angle Direct Mount with 1/2" NPT (with "D" Case Only)
04 = 4" Stem x 3/8" Diameter
06 = 6" Stem x 3/8" Diameter
09 = 9" Stem x 3/8" Diameter
0? = 12" or Longer Stem x 3/8" Diameter (specify stem length)*

Sliding Union 1/2" NPT on Bendable Extension
87 = 3/8" x 3" Active, 12" Bendable Extension
88 = 3/8" x 3" Active, 18" Bendable Extension
8X = 3/8" x 3" Active, Over 18" Bendable Extension (specify stem length)*

Plain Bulbs:
11 = Plain Bulb, 3/8" x 3" Active, +12" Rigid Extension
12 = Plain Bulb, 3/8' x 3" Active

*Specify stem length. Example: G45DA - 0X - 12"- FB
Note: All bulbs and capillaries are 316SS.

ALL ANGLE BULB

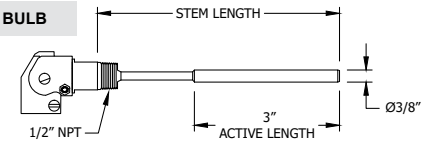

BENDABLE EXTENSION

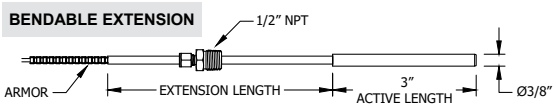

11

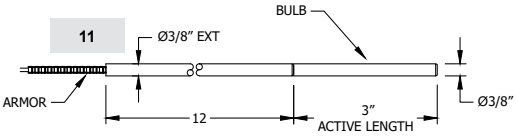

12

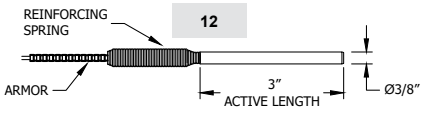

L15 — CAPILLARY LENGTH

L?? = Armored Capillary Length in ft. Lengths up to 99 ft. Omit for "D Case". Example 5ft. = L05.

Note: Stainless steel spring armor is standard protection on all capillary. Capillary over 40 ft. require XSI Spiral Interlock Armor option.

FB — TEMPERATURE RANGE

Ranges & Minor Divisions
FB = -320°F to 100°F, 5°
FE = -120°F to 120°F, 2°
FG = -40°F to 180°F, 2°
FH = 0°F to 120°F, 1°
FJ = 60°F to 120°F, 1°
FL = 20°F to 240°F, 2°
FN = 0°F to 300°F, 5°
F0 = 150°F to 450°F, 5°
FP = 50°F to 550°F, 5°
FR = 50°F to 750°F, 5°
FT = 400°F to 1200°F, 10°
FX = 0°F to 1000°F, 10°
CD = -200°C to 100°C, 5°
CI = 0°C to 120°C, 1°
CT = 200°C to 650°C, 5°

Dual Scale Ranges & Divisions
DB = -320°F to 100°F & -200°C to 40°C, 5° & 2°
DE = -120°F to 120°F & -85°C to 50°C, 2° & 1°
DG = -40°F to 180°F & -40°C to 80°C, 2° & 2°
DH = 0°F to 120°F & -15°C to 50°C, 1° & 1°
DJ = 60°F to 120°F & -15°C to 50°C, 1° & 1/2°
DL = 20°F to 240°F & -5°C to 110°C, 2° & 1°
DN = 0°F to 300°F & -10°C to 150°C, 5° & 1°
D1 = 150°F to 450°F & 70°C to 230°C, 5° & 1°
DP = 50°F to 550°F & 10°C to 290°C, 5° & 5°
DR = 50°F to 750°F & 0°C to 400°C, 5° & 5°
DT = 400°F to 1200°F & 200°C to 650°C, 10° & 5°

XAW — ACCESSORIES & OPTIONS

XAW = Acrylic Window*
XSG = Safety Glass Window*
XFR = Flush Mounting Ring for "E" Case
XBF = 1/2" NPT Compression Fitting for #11 Bulb (Attaches to 12" Extension, not Bulb)
XCF = 1/2" NPT Compression Fitting (Attaches to Spiral Interlock Armor. For #12 Bulb Only. Requires XSI Option.)
XSI = Spiral Interlock Armor (Required over 40 Feet)
XVD = Vibration Dampening Feature (Dampens Vibration - Available in all Rear Connected Models)
XTW = Thermowell (See Thermowell Table Below for Order Codes)

*Not Available for Aluminum Front Flange Hinge Ring (F) Case, F Case is Glass Only

STANDARD THERMOWELLS FOR 3/8" DIAMETER ELEMENTS

P	A	U	304SS	316SS
3/4" NPT	4"	2 1/2"	ST4304-SB3	ST4316-SB3
	6"	4 1/2"	ST6304-SB3	ST6316-SB3
	9"	7 1/2"	ST9304-SB3	ST9316-SB3
	12"	10 1/2"	ST12304-SB3	ST12316-SB3
	15"	13 1/2"	ST15304-SB3	ST15316-SB3
	18"	16 1/2"	ST18304-SB3	ST18316-SB3
	24"	22 1/2"	ST24304-SB3	ST24316-SB3
1/2" NPT	4"	2 1/2"	ST4304-HSB3	ST4316-HSB3
	6"	4 1/2"	ST6304-HSB3	ST6316-HSB3
	9"	7 1/2"	ST9304-HSB3	ST9316-HSB3
	12"	10 1/2"	ST12304-HSB3	ST12316-HSB3
	15"	13 1/2"	ST15304-HSB3	ST15316-HSB3
	18"	16 1/2"	ST18304-HSB3	ST18316-HSB3
	24"	22 1/2"	ST24304-HSB3	ST24316-HSB3

LAGGING THERMOWELLS FOR 3/8" DIAMETER ELEMENTS

P	A	U	T	304SS	316SS
3/4" NPT	6"	2 1/2"	2"	LG6304-SB3	LG6316-SB3
	9"	4 1/2"	3"	LG9304-SB3	LG9316-SB3
	12"	7 1/2"	3"	LG12304-SB3	LG12316-SB3
	15"	10 1/2"	3"	LG15304-SB3	LG15316-SB3
	18"	13 1/2"	3"	LG18304-SB3	LG18316-SB3
	24"	19 1/2"	3"	LG24304-SB3	LG24316-SB3

All dimensions are in inches.

Standard Thermowells

All dimensions are in inches.

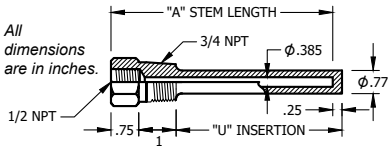

All dimensions are in inches.

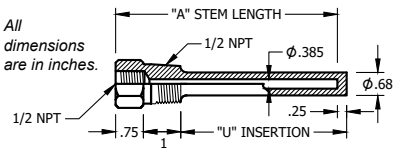

Lagging Thermowells

All dimensions are in inches.

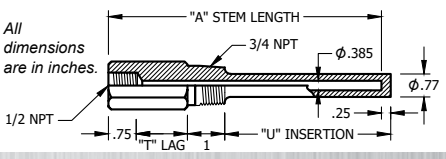

THERMOMETERS

DIRECT DRIVE REMOTE THERMOMETER

REOTEMP's Rugged Direct Drive System makes our series 45G the right choice for temperature indication in heavy-duty or high vibration applications. The all-stainless steel case and internals, along with the direct drive system, result in superior instrument life in severe environments.

Available in Four Styles

- WALL MOUNTED
- FLUSH MOUNTED
- FRONT FLANGE
- ADJUSTABLE WALL

Accuracy Custom Logo Made in the USA

FEATURES / BENEFITS

- Accuracy ± 1% of Range Span
- Can handle a wide temperature range up to 1200°F
- Heavy-Duty Vibration and Shock Resistant
- Stainless Steel Sealed Construction
- Various mounting options available

SPECIFICATIONS

Accuracy	±1% of Range Span
Dial	4 1/2" Satin finish aluminum with black lines and numbers.
Case Material	Stainless Steel
Bulb	Stainless Steel Welded Construction
Actuation	Nitrogen through Stainless Steel Direct Drive Bourdon Coil
Pointer	Micrometer Adjustment Type
Lens	Gasket Sealed Glass (Standard); Plexi Glass
Capillary	Stainless steel protected by 1/4" diameter, Flexible Stainless Steel Armor or 3/16" diameter Plain Armor

NITROGEN FILLED
DIRECT DRIVE SYSTEM

DIRECT DRIVE REMOTE THERMOMETER

HOW TO ORDER: Choose options to build a part number. For example: 45GW0500G112-EC

45GW	05	00	G112	-EC
MODEL	ARMORED CAPILLARY LENGTH	TEMPERATURE RANGE	BULB TYPE	ACCESSORIES

MODEL

45GW = Wall Mount
45GF = Flush Mount
45GFF = Front Flange with clamp
45GAW = Adjustable Wall Mount

ARMORED CAPILLARY LENGTH

05 = 5 Feet
06 = 6 Feet
10 = 10 Feet
?? = Specify Length in Feet

Note: ?? = Length in feet (e.g. 05 = 5 feet)
Note: Max length is?

Note: Thermowells should be used whenever the stem or bulb would be exposed to pressure, corrosion, velocity, abrasion or shear forces. Thermowells also make it possible to remove the thermometer without losing pressure or the contents of the process.

TEMPERATURE RANGE

Fahrenheit Ranges
16 = -350°F to 150°F
17 = -100°F to 100°F
19 = -30°F to 120°F
20 = -40°F to 200°F
23 = 0°F to 150°F
25 = 0°F to 200°F
26 = 0°F to 240°F
27 = 0°F to 300°F
30 = 0°F to 400°F
31 = 0°F to 500°F
32 = 0°F to 600°F
34 = 0°F to 800°F
36 = 0°F to 1200°F

Celsius Ranges
00 = -200°C to 100°C
01 = -100°C to 100°C
02 = -30°C to 60°C
05 = -30°C to 120°C
06 = -10°C to 150°C
07 = 0°C to 100°C
08 = 0°C to 200°C
09 = 0°C to 240°C
10 = 0°C to 300°C
11 = 0°C to 400°C
13 = 0°C to 500°C
14 = 0°C to 600°C

BULB TYPE

G112 = 12" Bendable Extension with 1/2" NPT Compression Fitting (union)
G118 = 18" Bendable Extension with 1/2" NPT Compression Fitting (union)
G212 = 12" Plain Bulb with Rigid Extension
G224 = 24" Plain Bulb with Rigid Extension

ACCESSORIES

-EC = Electrical Contacts
-MP = Max. Hand Pointer
-SG = Tempered Glass
-PY = Polycarbonate Crystal

45GW — **Wall Mounted Complete with Bracket**

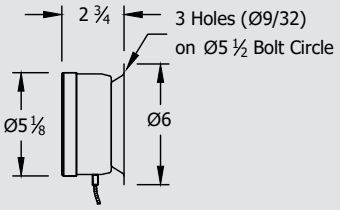

All dimensions are in inches.

45GF — **Flush Mounted Complete with U Bracket**

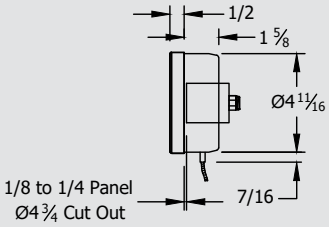

All dimensions are in inches.

45GFF — **Flush Mounted**

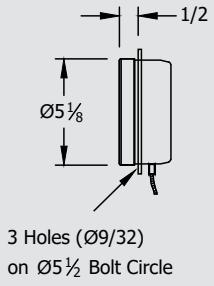

All dimensions are in inches.

45GAW — **Adjustable Wall Mounted Complete with Flange**

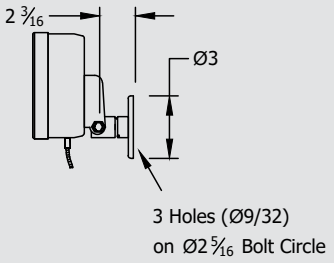

All dimensions are in inches.

G1 Bulb — **3/8" Diameter Bulb with 3/16" Bendable Complete with 1/2" NPT Compression Fitting All SS**

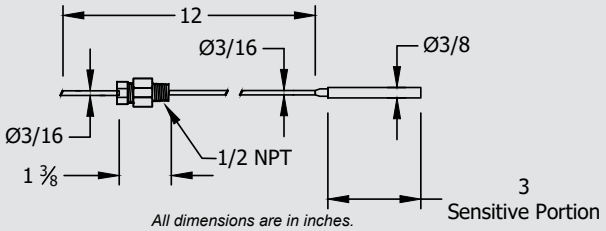

All dimensions are in inches.

G2 Bulb — **3/8" Diameter Bulb with 3/8" Extension up to 48" with Optional 1/2"NPT Compression Fitting All SS**

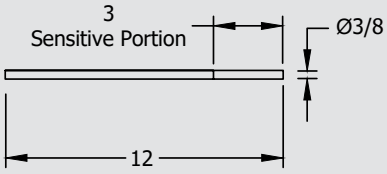

All dimensions are in inches.

THERMOMETERS

DIRECT DRIVE ALL ANGLE THERMOMETER

REOTEMP's Rugged Direct Drive System makes our 45GR and 45LR the right choice for temperature indication in heavy- duty or high vibration applications. The all-stainless steel case and internals, along with the direct drive system, result in superior instrument life in severe environments.

Model 45GR

Model 45LR

Accuracy Custom Logo Made in the USA

FEATURES / BENEFITS

- Accuracy ± 1% of Range Span
- Can handle a wide temperature range up to 1200°F.
- Heavy-Duty Vibration and Shock Resistant
- Stainless Steel Sealed Construction
- Adjustable to any angle.

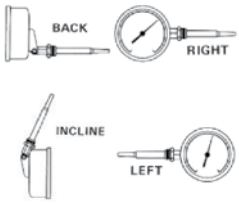

EVERY ANGLE

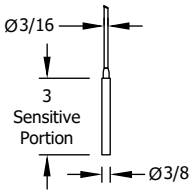

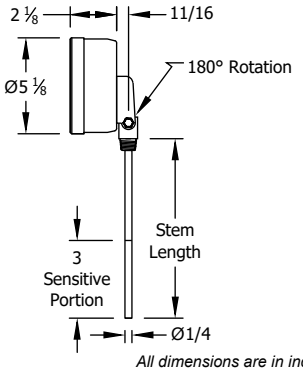

All dimensions are in inches.

SPECIFICATIONS

Accuracy	±1% of Range Span
Dial	4 1/2" Satin finish aluminum with black lines and numbers.
Case Material	Stainless Steel
Bulb	Stainless Steel Welded Construction
Actuation	45LR - Inert Liquid thru Stainless Steel Direct Drive Bourdon Coil. 45GR - Nitrogen thru Stainless Steel Direct Drive Bourdon Coil.
Pointer	Micrometer Adjustment Type
Lens	Gasket Sealed Glass (Standard); Polycarbonate

HOW TO ORDER: Choose options to build a part number. For example: 45GR0400-ST6316

45GR | **04** | **00** | **-ST6316**

MODEL

45GR = Gas Actuated, 3/8" Stem
45LR = Inert Liquid Actuated, 1/4" Stem

STEM LENGTH

04 = 4"
06 = 6"
09 = 9"
12 = 12"
15 = 15"
18 = 18"
24 = 24"

TEMPERATURE RANGE

Fahrenheit Ranges
16 = -350°F to 150°F
17 = -100°F to 100°F
19 = -30°F to 120°F
20 = -40°F to 200°F
23 = 0°F to 150°F
25 = 0°F to 200°F
26 = 0°F to 240°F
27 = 0°F to 300°F
30 = 0°F to 400°F
31 = 0°F to 500°F
32 = 0°F to 600°F
34 = 0°F to 800°F
36 = 0°F to 1200°F

Celsius Ranges
00 = -200°C to 100°C
01 = -100°C to 100°C
02 = -30°C to 60°C
05 = -30°C to 120°C
06 = -10°C to 150°C
07 = 0°C to 100°C
08 = 0°C to 200°C
09 = 0°C to 240°C
10 = 0°C to 300°C
11 = 0°C to 400°C
13 = 0°C to 500°C
14 = 0°C to 600°C

ACCESSORIES

-EC = Electrical Contacts
-MP = Max. Hand Pointer
-SG = Tempered Glass
-PY = Polycarbonate Crystal

STANDARD THERMOWELLS WITH 3/4" NPT & 316SS

Stem Length	"U" Dim.	1/4" Element	3/8" Element
4"	2.5"	**ST4316**	**ST4316-B3**
6"	4.5	**ST6316**	**ST6316-B3**
9"	7.5"	**ST9316**	**ST9316-B3**

For Additional Thermowell Types, See Pages 160-166

LIQUID-IN-GLASS THERMOMETER

REOTEMP's Liqiud-In-Glass Industrial Thermometers are used in pipelines of all types, commercial building application (heating & cooling), process piping, tanks, boilers, etc.

1%
Accuracy

Made in the USA

FEATURES / BENEFITS

- Made to ASME B40.3 Specifications
- Accuracy ± 1% Full Scale. (ASME B40.3)
- One Year Warranty

SPECIFICATIONS

Accuracy: ± 1% Full Scale. (ASME B40.3)
Case: Modern V-shape design with parts molded of polyester, in black textured finish. Heavy glass protected front firmly secured by spring action.
Stem: Tapered bulb chambers are made of precision ground aluminum. The tapered chamber forms a metal contact with matching taper in the sockets assuring maximum speed of response to temperature changes. Graphite is used as a conducting media between bulb chamber and glass tube.
Locking Device: Adjustable case locknut and angle adjusting screw work independently to provide full 360º positioning of thermometer case and stem.
Tube & Capillary: Blue Spirit filled magnifying lens tube. Precision made to guarantee accuracy within 1% of scale range. Silicone shock mounting for lasting durability.
Scale: 9" scale with white coated aluminum and permanently baked bold black markings.

HOW TO ORDER: Choose options to build a part number. For example: 9VS35016SOC35B

9VS35 | **016** | **SOC35B**

Note: Thermowells should be used whenever the stem or bulb would be exposed to pressure, corrosion, velocity, abrasion or shear forces. Thermowells also make it possible to remove the thermometer without losing pressure or the contents of the process.

STEM

9VS35 = 3 1/2"
9VS06 = 6"
9VS09 = 9"

TEMPERATURE RANGE

Fahrenheit Ranges
411 = -40°F to 110°F; 2°
118 = -10°F to 180°F; 2°
212 = -20°F to 120°F; 2°
012 = 0°F to 120°F; 1°
016 = 0°F to 160°F; 2°
318 = 30°F to 180°F; 2°
324 = 30°F to 240°F; 2°
330 = 30°F to 300°F; 2°

Celsius Ranges
042 = -20°C to 45°C; 1°
050 = 0°C to 50°C; 1°
100 = 0°C to 100°C; 1°
162 = 0°C to 160°C; 2°
200 = 0°C to 200°C; 2°

THERMOWELL

STANDARD THERMOWELLS (SEPERABLE SOCKETS) WITH 3/4" NPT

Material	Socket Style	"A" Stem Length	"U" Insertion Length	"T" Extension Length	Code
Brass	Standard	3 1/2"	2 1/2"	N/A	SOC35B
		6"	5"	N/A	SOC06B
		9"	8"	N/A	SOC09B
	Extension Neck	6"	2 1/2"	2 1/2"	SEN06B
		9"	5 1/2"	2 1/2"	SEN09B
304SS	Standard	3 1/2"	2 1/2"	N/A	SOC35S
		6"	5"	N/A	SOC06S
		9"	8"	N/A	SOC09S
	Extension Neck	6"	2 1/2"	2 1/2"	SEN06S
		9"	5 1/2"	2 1/2"	SEN09S

All dimensions are in inches.

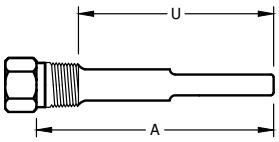

Standard Thermowell

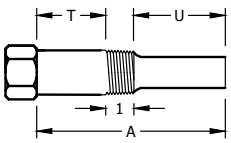

w/ Extension Neck (Lag)

REOTEMP®
INSTRUMENTS

THERMOWELLS

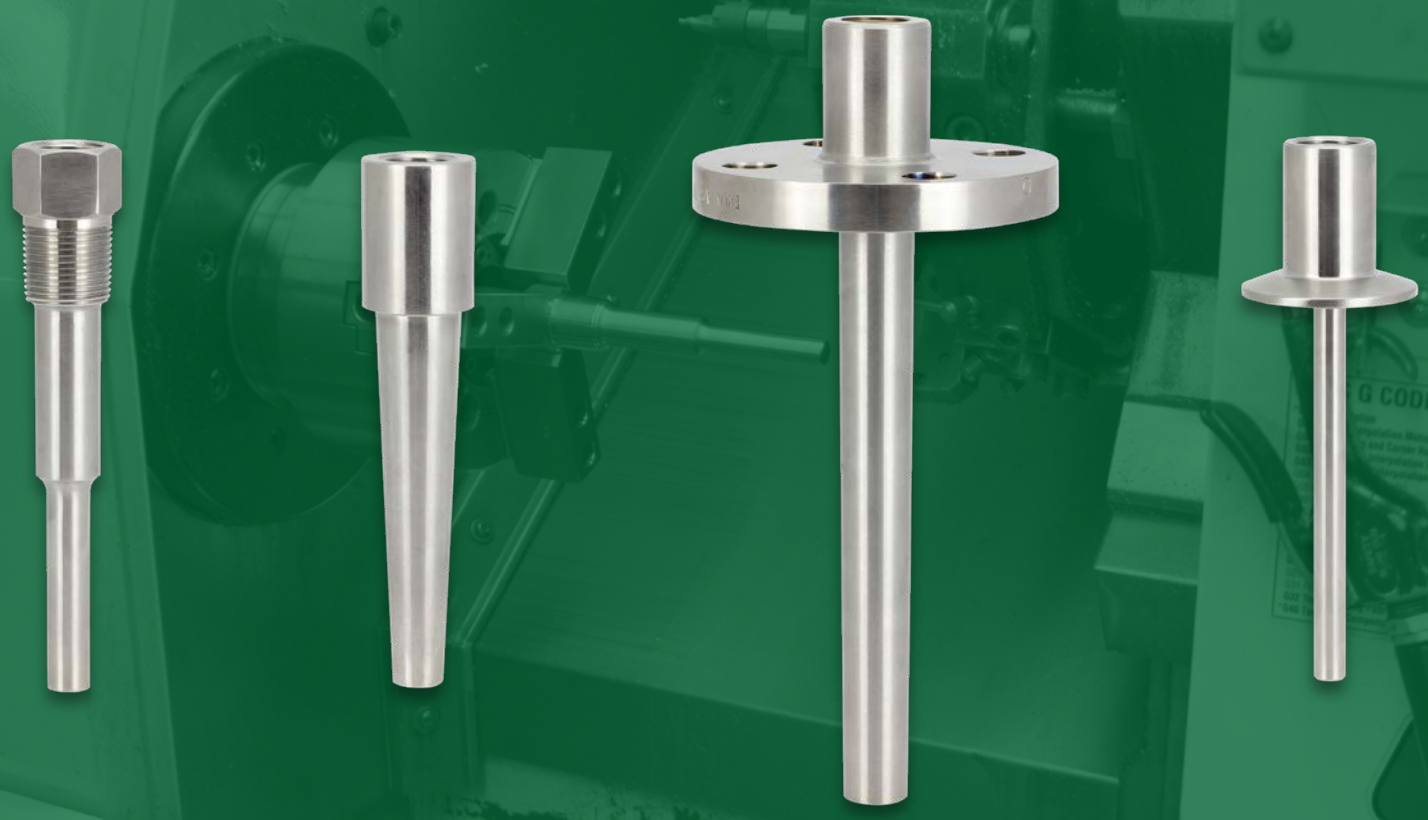

REOTEMP Thermowells are manufactured to the highest quality and precision, ensuring a durable product for even the most severe applications. Whether it is a custom design or a common configuration, REOTEMP responds quickly to exceed customer requirements.

THREADED THERMOWELLS

REOTEMP Threaded Thermowells make it possible to remove an instrument without dropping pressure or losing contents of the process. Thermowells also protect the instrument from getting bent by the process media. Threaded thermowells are perfect for applications that require infrequent replacement and are commonly installed on smaller pipes or vessels. They are best suited for non-corrosive media. REOTEMP threaded thermowells are machined from solid bar stock.

Threaded

FEATURES / BENEFITS

- Machined from Solid Material
- Protects Your Instrument from the Process
- Easy Removal of Instrument for Calibration or Replacement

OPTIONS

- Wake Frequency Calculation
- Hydrostatic Test
- NACE Certified
- Material Certificate
- Special Marking (Stamping)
- Plug & Chain
- PMI

Standard

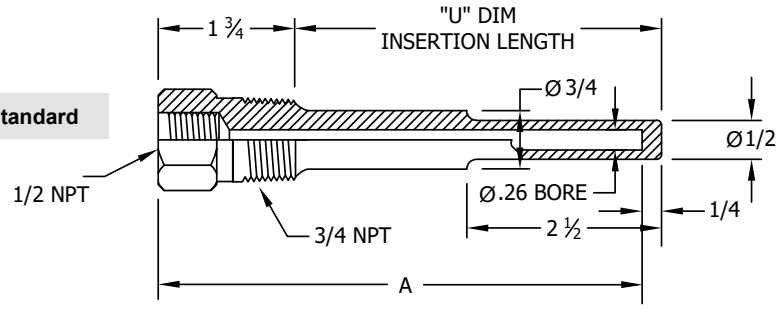

All dimensions are in inches.

Lagging

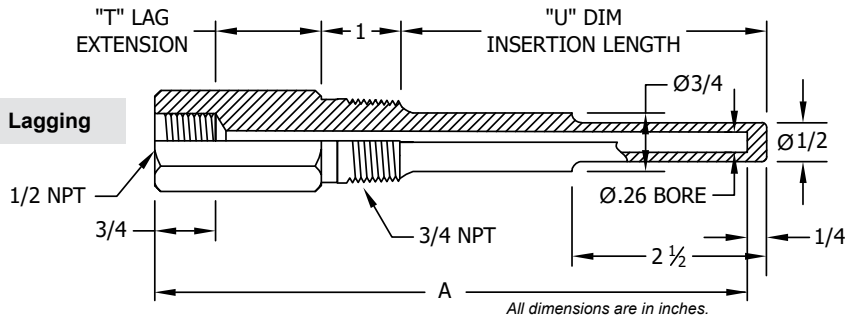

All dimensions are in inches.

STANDARD DIMENSIONS			
Stem "A"	Standard "U"	Lagging "U"	Overall Length
2.5"	1.625"	N/A	2.875"
4"	2.5"	N/A	4.25"
6"	4.5"	2.5"	6.25"
9"	7.5"	4.5"	9.25"
12"	10.5"	7.5"	12.25"

THREADED THERMOWELLS

Visit reotemp.com

- ✓ Check Stock
- ✓ Configure Part #
- ✓ Get Price
- ✓ Generate a Custom Engineering Drawing

HOW TO ORDER: Choose options to build a part number. For example: ST6316-ML

ST 6 316 - -ML

TYPE	"A" STEM LENGTH	MATERIAL	PROCESS CONNECTION	SHANK	BORE DIAMETER	OPTIONS
ST = Threaded **LG** = Threaded Lagging	**2.5** = 2.5" **4** = 4" **6** = 6" **9** = 9" **12** = 12"	**304** = 304SS **316** = 316SS **316L** = 316L SS **B** = Brass **C** = Carbon Steel (1018) **G** = Hastelloy B **H** = Hastelloy C **M** = Monel/A400 **T** = Titanium **Y** = Inconel 600 **A** = Alloy 105 Carbon Stainless Steel **D** = Alloy 20 **5** = F5 Alloy **P** = PTFE Coated 316SS **N** = F22 Alloy Other materials available. Contact REOTEMP customer service for more information.	**" "** = 3/4" NPT (std.) **1** = 1" NPT **H** = 1/2" NPT **2** = 1.5" NPT	**" "** = Stepped (std.)* **T** = Tapered **S** = Straight *Not available with .385 bore.	**" "** = .260 (std.) **B3** = .385 **B5** = .515 **I3** = 3/4" NPT Internal Thread Other bore and internal thread sizes available.	**EP** = External Pressure Test **IT** = Internal Pressure Testing (5 min. test) **MT** = Material Certificate **ML** = Mill Certificate **MR** = NACE MR-01-75 Approval **M3** = NACE MR-01-03 Approval **PM** = Positive Material Identification (PMI) **P4** = SS 304 Plug & Chain **P6** = SS 316 Plug & Chain **PB** = Brass Plug & Chain **R2** = Special Surface Finish (Ra 20 max) **T1** = Tantalum Coating/ Halar Coating **T2** = Teflon Coating (Specify PFA or PTFE) **T3** = Tungsten Carbide Coating **TM** = Special Marking (Stamping) **TS** = SS Tag (attached) **WK** = Wake Frequency Calculation

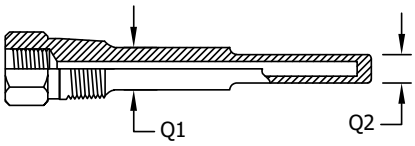

All dimensions are in inches.

STEPPED SHANK

Bore Dia.	Ext. Thread Size	Shank Dia. "Q1" (U>2.5)	Shank Dia. "Q2"
.260"	1/2" NPT	.625"	.500"
.260"	3/4" NPT	.750"	.500"
.260"	1" NPT	.875"	.500"

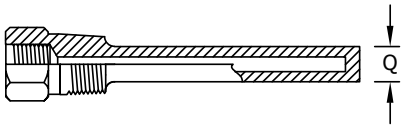

All dimensions are in inches.

STRAIGHT SHANK

Bore Dia.	Ext. Thread Size	Shank Dia. "Q" (U≤2.5)	Shank Dia. "Q" (U>2.5)
.260"	1/2" NPT	.500"	.625"
.260"	3/4" NPT	.500"	.625"
.260"	1" NPT	.750"	.875"
.385"	1/2" NPT	.680"	.680"
.385"	3/4" NPT	.766"	.766"
.385"	1" NPT	.875"	.875"

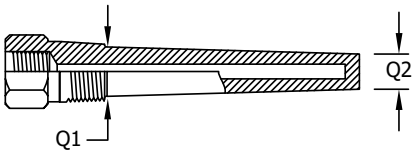

All dimensions are in inches.

TAPERED SHANK

Bore Dia.	Ext. Thread Size	Shank Dia. "Q1"	Shank Dia. "Q2"
.260"	1/2" NPT	.680"	.625"
.260"	3/4" NPT	.875"	.625"
.260"	1" NPT	1.062"	.625"
.385"	1/2" NPT	.680"	.625"
.385"	3/4" NPT	.875"	.766"
.385"	1" NPT	1.062"	.766"

WELDED THERMOWELLS

REOTEMP Welded Thermowells make it possible to remove an instrument without dropping pressure or losing the contents of the process. Thermowells also protect the instrument from getting bent by the process media. Weld-in thermowells are welded directly to a pipe or tank, providing a very high quality connection. Because they are welded, they should only be used when access is not required and corrosion is not an issue. Common installations include high temperature and high pressure applications with non-corrosive media. REOTEMP weld-in thermowells are machined from bar stock.

Socket Weld

FEATURES / BENEFITS

- High Quality Connection
- Ideal for High Temperature and High Pressure Applications with Non-corrosive Media
- Socket Weld or Standard Weld-in
- Easy Removal of Instrument for Calibration or Replacement

OPTIONS

- Wake Frequency Calculation
- Hydrostatic Test
- NACE Certified
- Material Certificate
- Special Marking (Stamping)
- Plug & Chain
- PMI

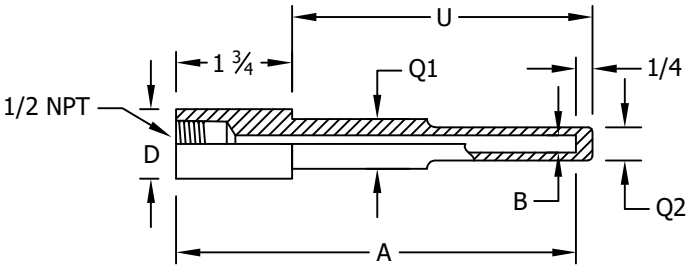

All dimensions are in inches.

SOCKET WELD STEPPED SHANK

Bore Dia. "B"	Nominal Pipe Size "P"	O.D. "D"	Shank Dia. "Q1" (U≤2.5)	Shank Dia. "Q1" (U>2.5)	Shank Dia. "Q2"
.260"	3/4"	1.050"	.500"	.750"	.500"
.260"	1"	1.315"	.750"	.875"	.500"
.260"	1.5"	1.900"	1.000"	1.120"	.500"

SOCKET WELD STRAIGHT SHANK

Bore Dia. "B"	Nominal Pipe Size "P"	O.D. "D"	Shank Dia. "Q2" (U≤2.5)	Shank Dia. "Q2" (U>2.5)
.260"	3/4"	1.050"	.500"	.750"
.260"	1"	1.315"	.750"	.875"
.260"	1.5"	1.900"	1.00"	1.12"
.385"	3/4"	1.050"	.766"	.766"
.385"	1"	1.315"	.766"	.875"
.385"	1.5"	1.900"	1.00"	1.12"

SOCKET WELD TAPERED SHANK

Bore Dia. "B"	Nominal Pipe Size "P"	O.D. "D"	Shank Dia. "Q1"	Shank Dia. "Q2"
.260"	3/4"	1.050"	.750"	.625"
.260"	1"	1.315"	1.000"	.625"
.260"	1.5"	1.900"	1.370"	.625"

WELDED THERMOWELLS

Visit reotemp.com

- ✓ Check Stock
- ✓ Configure Part #
- ✓ Get Price
- ✓ Generate a Custom Engineering Drawing

HOW TO ORDER: Choose options to build a part number. For example: SW6316-P1T-ML

SW	6	316	- P1	T		-ML
TYPE	"A" STEM LENGTH	MATERIAL	PROCESS CONNECTION	SHANK	BORE DIAMETER	OPTIONS
SW = Socket Weld **SWL** = Socket Weld w/ Lagging **WI** = Weld-In **WIL** = Weld-In w/ Lagging	**2.5** = 2.5" **4** = 4" **6** = 6" **9** = 9" **12** = 12"	**304** = 304SS **316** = 316SS **316L** = 316L SS **B** = Brass **C** = Carbon Steel (1018) **G** = Hastelloy B **H** = Hastelloy C **M** = Monel/A400 **T** = Titanium **Y** = Inconel 600 **A** = Alloy 105 Carbon Stainless Steel **D** = Alloy 20 **5** = F5 Alloy **P** = PTFE Coated 316SS **N** = F22 Alloy Other materials available. Contact REOTEMP customer service for more information.	**" "** = 3/4" Pipe Nominal (1.050" OD) (std.) **P1** = 1" Pipe Nominal (1.315" OD) **P2** = 1.5" Pipe Nominal **P3** = 2" Pipe Nominal	**" "** = Stepped (std.)* **T** = Tapered **S** = Straight *Not available with .385 bore.	**" "** = .260 (std.) **B3** = .385 **B5** = .515 **I3** = 3/4" NPT Internal Thread Other bore and internal thread sizes available.	**EP** = External Pressure Test **IT** = Internal Pressure Testing (5 min. test) **MT** = Material Certificate **ML** = Mill Certificate **MR** = NACE MR-01-75 Approval **M3** = NACE MR-01-03 Approval **PM** = Positive Material Identification (PMI) **P4** = SS 304 Plug & Chain **P6** = SS 316 Plug & Chain **PB** = Brass Plug & Chain **R2** = Special Surface Finish (Ra 20 max) **T1** = Tantalum Coating/ Halar Coating **T2** = Teflon Coating (Specify PFA or PTFE) **T3** = Tungsten Carbide Coating **TM** = Special Marking (Stamping) **TS** = SS Tag (attached) **WK** = Wake Frequency Calculation

Weld-In

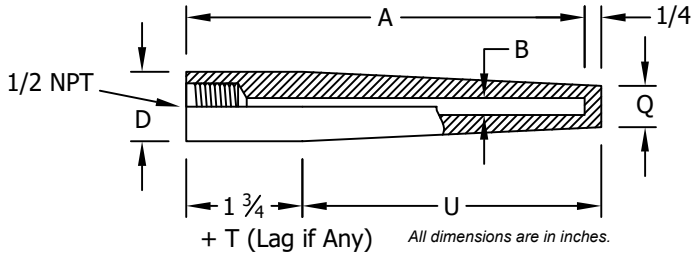

All dimensions are in inches.

WELD-IN TAPERED SHANK

Bore Dia. "B"	Nominal Pipe Size "P"	O.D. "D"	Tip Dia "Q"
.260 in	3/4"	1.050"	.625"
	1"	1.315"	.766"
.385 in	3/4"	1.050"	.625"
	1"	1.315"	.766"

FLANGED THERMOWELLS

REOTEMP's Flanged Thermowells make it possible to remove an instrument without dropping pressure or losing contents of the process. Thermowells also protect the instrument from getting bent by the process media. Flanged thermowells are the preferred well for applications that require frequent removal or replacement due to corrosion or other hazards. Flanged wells bolt to a mating flange that is installed on the process piping. Common installations include large pipes with high pressure and high corrosion.

FEATURES / BENEFITS

- Die Stamped with Material
- Ideal for High Pressure and High Corrosion Applications Requiring Frequent Replacement
- Easy Removal of Instrument for Calibration or Replacement

OPTIONS

- Wake Frequency Calculation
- Hydrostatic Test
- Full Penetration Welds
- NACE Certified
- Material Certificates
- PMI

Flanged

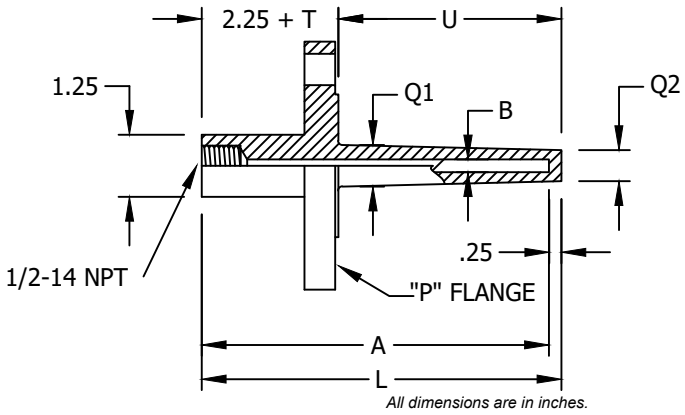

Van Stone

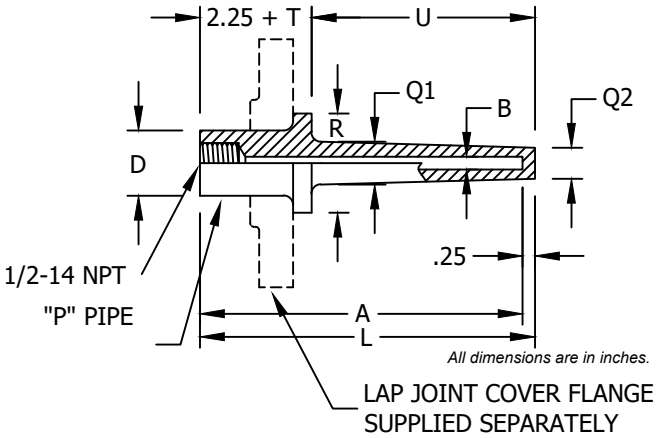

TAPERED SHANK

Bore Dia. "B"	Flange Size	Shank Dia. "Q1"	Shank Dia. "Q2"
.260"	3/4"	.750"	.625"
.260"	1"	.875"	.625"
.260"	1-1/2" & up	1.062"	.625"
.385"	3/4"	.750"	.625"
.385"	1"	.875"	.766"
.385"	1-1/2" & up	1.062"	.766"

STEPPED SHANK

Bore Dia. "B"	Shank Dia. "Q1"	Shank Dia. "Q2"
.260"	.750"	.500"

STRAIGHT SHANK

Bore Dia. "B"	Shank Dia. "Q2"
.260"	.750"
.385"	.875"

VAN STONE SIZE

Nominal Pipe Size "P"	O.D. "D"	Raised Face Dia. "R"
1"	1.315"	2.000"
1.5"	1.900"	2.875"

VAN STONE

Bore Dia. "B"	Shank Dia. "Q"
.260"	.750"
.385"	.875"

FLANGED THERMOWELLS

Visit reotemp.com

- ✓ Check Stock
- ✓ Configure Part #
- ✓ Get Price
- ✓ Generate a Custom Engineering Drawing

HOW TO ORDER: Choose options to build a part number. For example: 151R2STU040L062-ML

15	1	R	2	S	T	U040L062
FLANGE SIZE	**FLANGE RATING**	**SEALING FACE**	**BORE DIAMETER**	**MATERIAL**	**SHANK STYLE**	**"U" DIMENSIONS & OVERALL LENGTH**
05 = 1/2" **07** = 3/4" **10** = 1" **15** = 1.5" **20** = 2" **25** = 2.5" **30** = 3"	**1** = 150# **3** = 300# **6** = 600# **9** = 900 - 1500# **5** = 2500# **V** = VanStone	**R** = Raised Face **F** = Flat Face **J** = RTJ (Ring Type Joint) **Q** = Other (Specify)	**2** = .260" (For 1/4" Stem) **3** = .385" (For 3/8" Stem) **Q** = Other (Specify) *Not available with .385 bore.	**S** = 316SS **F** = 304SS **C** = Carbon Steel **D** = Carp. 20/Alloy 20 **G** = Hastelloy B **H** = Hastelloy C **L** = F11 Alloy **M** = Monel **Y** = Inconel (600) **U** = Tantalum Lined **Z** = Zirconium (316 flg) **V** = 317SS **T** = Titanium **K** = 316/Stellite Coating **2** = Alloy 20 **5** = F5 Alloy **N** = F22 Alloy **P** = PTFE Coated 316SS	**T** = Tapered **S** = Straight **P** = Stepped* **R** = Tapered w/ Support Ring **Q** = Other *Not available with .385 bore.	

"U" Dimensions	Overall Length
U020 = 2"	**L042** = 4.25"
U040 = 4"	**L062** = 6.255"
U070 = 7"	**L092** = 9.25"
U100 = 10"	**L122** = 12.25"
U130 = 13"	**L152** = 15.25"
U160 = 16"	**L182** = 18.25"
U220 = 22"	**L242** = 24.25"
U225 = 22.5"	**L247** = 24.75"
M250 = 250mm	**M307** = 307mm

Note: Rows above indicate standard pairings, for example: a 2" U dimension comes standard with a 4.25" overall length.

-ML

OPTIONS

EP = External Pressure Test
IT = Internal Pressure Testing (5 min. test)
MT = Material Certificate
ML = Mill Certificate
MR = NACE MR-01-75 Approval
M3 = NACE MR-01-03 Approval
PM = Positive Material Identification (PMI)
P4 = SS 304 Plug & Chain
P6 = SS 316 Plug & Chain
PB = Brass Plug & Chain
R2 = Special Surface Finish (Ra 20 max)
T1 = Tantalum Coating/ Halar Coating
T2 = Teflon Coating (Specify PFA or PTFE)
T3 = Tungsten Carbide Coating
TM = Special Marking (Stamping)
TS = SS Tag (attached)
WK = Wake Frequency Calculation

SANITARY THERMOWELLS

REOTEMP's Sanitary Thermowells make it possible to remove an instrument without dropping pressure or losing contents. Each stainless steel Thermowell is die stamped with type of material from which it is made. Sanitary wells have a smooth surface (RA32 or Better) and a Tri-Clamp® connection which allows for easy cleaning to prevent contamination of the process. They are used in the Dairy, Food Processing and Pharmaceutical industries.

3A® Certified

NACE INTERNATIONAL THE CORROSION SOCIETY

FEATURES / BENEFITS

- Smooth Surface for Easy Cleaning (RA32 or Better)
- Provides Sanitary Protection for Temperature Probes
- All 316L Stainless Steel Construction
- Fast Installation and Removal
- Ideal for Food, Beverage, Biotech, and Pharmaceutical Applications
- Exceeds 3A #4 Finish
- Easy Removal of Instrument for Calibration or Replacement

HOW TO ORDER: Choose a code to make your selection. For example: STF1.5-2.5

STF1.5-2.5

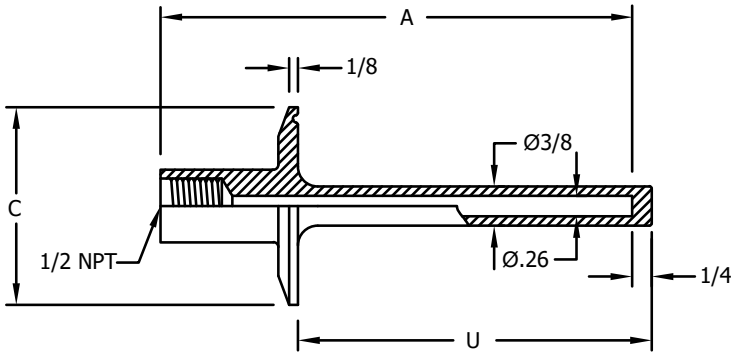

All dimensions are in inches.

Tri-Clamp® Size	"A" Stem Length	"U" Dimension	"C" Dimension	Code
1-1/2"	2-1/2"	1-5/8"	2"	STF1.5-2.5
	4"	2-1/2"		STF1.5-4
	6"	4-1/2"		STF1.5-6
	9"	7-1/2"		STF1.5-9
2"	2-1/2"	1-5/8"	2.5"	STF2-2.5
	4"	2-1/2"		STF2-4
	6"	4-1/2"		STF2-6
	9"	7-1/2"		STF2-9
2-1/2"	2-1/2"	1-5/8"	3"	STF2.5-2.5
	4"	2-1/2"		STF2.5-4
	6"	4-1/2"		STF2.5-6
	9"	7-1/2"		STF2.5-9
3"	2-1/2"	1-5/8"	3.6"	STF3-2.5
	4"	2-1/2"		STF3-4
	6"	4-1/2"		STF3-6
	9"	7-1/2"		STF3-9

NOTES

VISIT OUR WEBSITE

REOTEMP®.COM

WARRANTY & EVALUATION POLICY

REOTEMP warrants all pressure and temperature measurement products against defective workmanship or materials under normal use and service for the following periods after the date of shipment.

FIVE YEAR WARRANTY
- Process Grade Bimetal Thermometers (3", 4", and 5" dial sizes)

THREE YEAR WARRANTY
- Industrial Pressure and Differential Pressure Gauges
- Valves and Manifolds

ONE YEAR WARRANTY
- Diaphragm Seals
- Pressure Transmitters and Switches
- OEM Bimetal Thermometers
- Digital Thermometers
- Remote Reading Thermometers
- Thermowells
- Accessories and Other Items

REOTEMP's liability is limited to repair or replacement at the factory, shipping charges prepaid. This warranty does not cover deterioration from normal wear and tear, exposure to corrosive materials, exposure to temperatures or pressures in excess of those recommended, excessive vibration, forces, or abrasion which cause deformation of component parts. This warranty is expressly in lieu of any other warranty, expressed or implied. REOTEMP shall not be liable for any defect or consequential damages arising out of any defects or from any cause whatsoever. Suitability of product for the customer's application rests with the customer; REOTEMP does not warrant suitability of its products for the application chosen by the customer.

REOTEMP will only accept shipments with returned product that are accompanied with a return authorization issued by REOTEMP. Please respect the health and safety of our employees by cleaning goods before return, disclosing any chemicals or foreign substance that may be on returned product and enclosing MSDS information. Handling and cleaning fees may apply.

REOTEMP reserves the right to make product improvements and change its specifications stated throughout the catalog at any time without notification. Please contact the factory on all critical dimensions and specifications for verification.

REOTEMP'S GUIDING PRINCIPLES

> Provide industry leading customer satisfaction with a focus on fast turnaround, friendly service and keeping it easy to do business with REOTEMP. Make it Quick and Easy!

> Focus on manufacturing quality instruments, continuous improvement and adding value to our product and services.

> Build long-lasting and rewarding relationships with the people we do business with.

> Maintain an enjoyable, fulfilling work environment for our employees.

> Build a strong REOTEMP brand and reputation in the industrial markets where we compete.

> Achieve planned, sustained growth in our target markets both in the US and internationally.

OTHER REO*TEMP* CATALOGS

Thermocouples & RTDs

Head and Stem Assemblies

Temperature Transmitters

Sanitary 3-A RTDs

Thermowells & Accessories

Multipoint Sensors

Handheld Probes

Weld Pad TCs

REOTEMP®
INSTRUMENTS

Measuring your world since 1965™

U.S. (800) 648-7737
Int'l (00) 1-858-784-0710
Fax (858) 784-0720

10656 Roselle St.
San Diego, CA 92121
United States

sales@reotemp.com
reotemp.com

PTC-0218