THE WILLIAMS - CARVER COMPANY, INC.
4001 MISSION RD P.O. BOX #3140
KANSAS CITY, KS 66103-0140
Office (913) 236-4949 Fax (913) 236-9331
www.williamscarver.com

SPX
WHERE IDEAS MEET INDUSTRY

W68 and W88 Series

THROTTLING/PRESSURE CONTROL VALVES

FORM NO.: 95-03043 REVISION: 02/2013

READ AND UNDERSTAND THIS MANUAL PRIOR TO OPERATING OR SERVICING THIS PRODUCT.

3

CERTIFIED
EHEDG
EUROPEAN HYGIENIC ENGINEERING & DESIGN GROUP
TYPE EL - CLASS I
JANUARY 2009

Waukesha Cherry-Burrell®

SPX Flow Technology
611 Sugar Creek Road
Delavan, WI 53115 USA

Tel: (800) 252-5200 or (262) 728-1900
Fax: (800) 252-5012 or (262) 728-4904

E-mail: wcb@spx.com
Web site: www.spxft.com

The Williams-Carver Company, Inc.

1-800-736-4411

Revision Date: 02/2013

Publication: 95-03043

Warranty

Seller warrants its products to be free from defect in materials and workmanship for a period of one (1) year from the date of shipment. This warranty shall not apply to products which require repair or replacement due to normal wear and tear or to products which are subjected to accident, misuse or improper maintenance. This warranty extends only to the original Buyer. Products manufactured by others but furnished by Seller are exempted from this warranty and are limited to the original manufacturer's warranty.

Seller's sole obligation under this warranty shall be to repair or replace any products that Seller determines, in its discretion, to be defective. Seller reserves the right either to inspect the products in the field or to request their prepaid return to Seller. Seller shall not be responsible for any transportation charges, duty, taxes, freight, labor or other costs. The cost of removing and/or installing products which have been repaired or replaced shall be at Buyer's expense.

Seller expressly disclaims all other warranties, express or implied, including without limitation any warranty of merchantability of fitness for a particular purpose. The foregoing sets forth Seller's entire and exclusive liability, and Buyer's exclusive and sole remedy, for any claim of damages in connection with the sale of products. In no event shall Seller be liable for any special consequential incidental or indirect damages (including without limitation attorney's fees and expenses), nor shall Seller be liable for any loss of profit or material arising out of or relating to the sale or operation of the products based on contract, tort (including negligence), strict liability or otherwise.

Shipping Damage or Loss

If equipment is damaged or lost in transit, file a claim at once with the delivering carrier. The carrier has signed the Bill of Lading acknowledging that the shipment has been received from SPX Flow Technology in good condition. SPX Flow Technology is not responsible for the collection of claims or replacement of materials due to transit shortages or damages.

Warranty Claim

Warranty claims must have a **Returned Goods Authorization (RGA)** from the Seller before returns will be accepted.

Claims for shortages or other errors, exclusive of transit shortages or damages, must be made in writing to Seller within ten (10) days after delivery. Failure to give such notice shall constitute acceptance and waiver of all such claims by Buyer.

Safety

READ AND UNDERSTAND THIS MANUAL PRIOR TO INSTALLING, OPERATING, OR SERVICING THIS EQUIPMENT

Waukesha Cherry-Burrell recommends users of our equipment and designs follow the latest Industrial Safety Standards. At a minimum, these should include the industrial safety requirements established by:

1. Occupational Safety and Health Administration (OSHA), Title 29 of the CFR
   Section 1910.212- General Requirements for all Machines
2. National Fire Protection Association, ANSI/NFPA 79
   ANSI/NFPA 79- Electrical Standards for Industrial Machinery
3. National Electrical Code, ANSI/NFPA 70
   ANSI/NFPA 70- National Electrical Code
   ANSI/NFPA 70E- Electrical Safety Requirement for Employee Workplaces
4. American National Standards Institute, Section B11

Attention: Servicing energized industrial equipment can be hazardous. Severe injury or death can result from electrical shock, burn, or unintended actuation of controlled equipment. Recommended practice is to disconnect and lockout industrial equipment from power sources, and release stored energy, if present. Refer to the National Fire Protection Association Standard No. NFPA70E, Part II and (as applicable) OSHA rules for Control of Hazardous Energy Sources (Lockout-Tagout) and OSHA Electrical Safety Related Work Practices, including procedural requirements for:

- Lockout-tagout
- Personnel qualifications and training requirements
- When it is not feasible to de-energize and lockout-tagout electrical circuits and equipment before working on or near exposed circuit parts

Locking and Interlocking Devices: These devices should be checked for proper working condition and capability of performing their intended functions. Make replacements only with the original manufacturer's renewal parts or kits. Adjust or repair in accordance with the manufacturer's instructions.

Periodic Inspection: Industrial equipment should be inspected periodically. Inspection intervals should be based on environmental and operating conditions and adjusted as indicated by experience. At a minimum, an initial inspection within 3 to 4 months after installation is recommended. Inspection of the electrical control systems should meet the recommendations as specified in the National Electrical Manufacturers Association (NEMA) Standard No. ICS 1.3, Preventative Maintenance of Industrial Control and Systems Equipment, for the general guidelines for setting-up a periodic maintenance program.

Replacement Equipment: Use only replacement parts and devices recommended by the manufacturer to maintain the integrity of the equipment. Make sure the parts are properly matched to the equipment series, model, serial number, and revision level of the equipment.

Warnings and cautions are provided in this manual to help avoid serious injury and/or possible damage to equipment:

STOP ***DANGER:*** *marked with a stop sign.*
Immediate hazards which WILL result in severe personal injury or death.

⚠ ***WARNING:*** *marked with a warning triangle.*
Hazards or unsafe practices which COULD result in severe personal injury or death.

⚠ ***CAUTION:*** *marked with a warning triangle.*
Hazards or unsafe practices which COULD result in minor personal injury or product or property damage.

Care of Stainless Steel

NOTE: *SPX recommends the use of an FDA-approved anti-seize compound on all threaded connections.*

Stainless Steel Corrosion

Corrosion resistance is greatest when a layer of oxide film is formed on the surface of stainless steel. If film is disturbed or destroyed, stainless steel becomes much less resistant to corrosion and may rust, pit or crack.

Corrosion pitting, rusting and stress cracks may occur due to chemical attack. Use only cleaning chemicals specified by a reputable chemical manufacturer for use with 300 series stainless steel. Do not use excessive concentrations, temperatures or exposure times. Avoid contact with highly corrosive acids such as hydrofluoric, hydrochloric or sulfuric. Also avoid prolonged contact with chloride-containing chemicals, especially in presence of acid. If chlorine-based sanitizers are used, such as sodium hypochlorite (bleach), do not exceed concentrations of 150 ppm available chlorine, do not exceed contact time of 20 minutes, and do not exceed temperatures of 104°F (40°C).

Corrosion discoloration, deposits or pitting may occur under product deposits or under gaskets. Keep surfaces clean, including those under gaskets or in grooves or tight corners. Clean immediately after use. Do not allow equipment to set idle, exposed to air with accumulated foreign material on the surface.

Corrosion pitting may occur when stray electrical currents come in contact with moist stainless steel. Ensure all electrical devices connected to the equipment are correctly grounded.

Elastomer Seal Replacement Following Passivation

Passivation chemicals can damage product contact areas of this equipment. Elastomers (rubber components) are most likely to be affected. Always inspect all elastomer seals after passivation is completed. Replace any seals showing signs of chemical attack. Indications may include swelling, cracks, loss of elasticity or any other noticeable changes when compared with new components.

Introduction

For control top information, please refer to publication 95-03083 (2-piece) or 95-03077 (3-Piece (obsoleted)). For additional product information, please visit www.spx.com/en/waukesha-cherry-burrell/resources/product-literature.

General Information

Information in this manual should be read by all personnel involved in installation, setup, operation and maintenance of W68/W88 Series valves.

Always use installation tools and lubricants recommended by Waukesha Cherry-Burrell. Waukesha Cherry-Burrell products are subject to intensive intermediate and final leakage and functional tests.

The W68/W88 Series valves meet 3-A and EHEDG standards for sanitation, design, and style.

Factory Inspection

Each Waukesha Cherry-Burrell valve is shipped completely assembled, lubricated and ready for use.

Models and Specifications

W68/W88 valves are throttling or pressure control valves. Valves are one- or two-piece bodies. Valves are pneumatically or manually operated, depending on actuator installed.

Materials

- Product Wetted: ASTM 316L (UNS-S31603); (DIN-1.4404)
- Non-Product: ASTM 304 (UNS-S30400); (DIN-1.4301)
- Seat Material: Metal (standard) Tri Ring (optional)
- Elastomers: FKM (standard) EPDM (optional)

Equipment Serial Number

Waukesha Cherry-Burrell valves are identified by a serial number found on the label on the actuator cylinder.

Operating Parameters

Temperature Range:

The recommended operating temperature is determined by the material used for the seals.

No special precautions are required for applications within a temperature range of 32°F to 180°F (0°C to 82°C).

For applications above 190°F (88°C), clearances can be affected by excessive thermal expansion when the valve is installed in compact fabrications or manifolds. Valve bodies have thicker cross-sections than tubing, but thermal expansion can affect clearances in interconnecting piping sections.

If operating below 32°F (0°C):

- Control air must have an appropriately low dew point.
- Valve stems must be protected from icing to ensure long working life for valve stem seals.

Solenoid valves may not be used in the control module in room environments below 32°F (0°C) and over 140°F (60°C), as function cannot be guaranteed.

Seal Compatibility

Table 1: Seal Compatibility for FKM/EPDM Seals

	Fluoroelastomer (FKM) Seals	EPDM Seals
Thermal Range of Application	32°F to 375°F (0°C to 190°C)	0°F to 275°F (-18°C to 135°C)
Chemical Resistance	Silicone oil and grease	Silicone oil and grease
	Ozone, aging and weather resistant	Ozone, aging and weather resistant
	Oils and fats	Hot water and steam up to 275°F (135°C)
	Aliphatic, chlorinated and aromatic hydrocarbons	Many organic and inorganic acids
		Cleaning agents, soda and potassium alkalis
		Many polar solvents (alcohols, ketones, esters)
Not compatible with	Superheated steam	Mineral oil products (oils, greases and fuels)
	Formic and acetic acids	

Contact WCB Application Engineering for other fluid compatibility.

FKM and EPDM seals comply with FDA regulations.

Seat Options

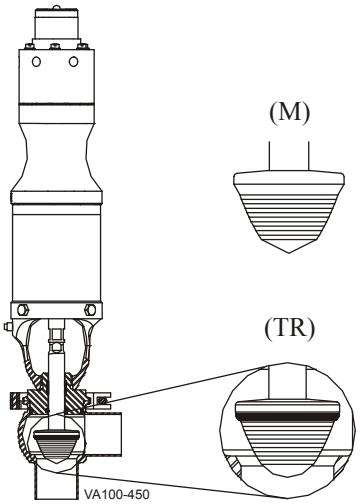

Figure 1: Seat Options

SEAT TYPE	MAXIMUM TEMPERATURE
Metal Seat (M)	190°F (375°C)
Tri Ring Seat (TR)*	Oper. 280°F (137°C) EPDM Steril. 275°F (135°C) EPDM Oper. 350°F (176°C) FKM Steril. Consult Factory FKM

*Tri Ring seat not available on CV1.75, 2.5, 5.0, 7.5 and 5ALD, 5ALDP actuated valves.

Pressure Ratings

Standard

Valve Size with pressure at:	1.0/1-1/2" (25/38 mm)	2.0" (51 mm)	2-1/2" (64 mm)	3.0" (76 mm)	4.0" (102 mm)
70°F (20°C)	500 psi (34.5 bar)	450 psi (31 bar)	400 psi (28 bar)	350 psi (24 bar)	200 psi (14 bar)
160 /180°F (71/82°C)	375 psi (26 bar)	350 psi (24 bar)	300 psi (17 bar)	250 psi (17 bar)	150 psi (10 bar)
250°F (121°C)	250 psi (17 bar)	250 psi (17 bar)	200 psi (14 bar)	150 psi (10 bar)	125 psi (8.6 bar)

Optional High Pressure Adapter and Clamps

Valve Size with pressure at:	1.0/1-1/2" (25/38 mm)	2.0" (51 mm)	2-1/2" (64 mm)	3.0" (76 mm)	4.0" (102 mm)
70°F (20°C)	1220 psi (84 bar)	900 psi (62 bar)	720 psi (49 bar)	--	--
160 /180°F (71/82°C)	1160 psi (80 bar)	855 psi (60 bar)	690 psi (47 bar)	--	--
250°F (121°C)	1100 psi (75 bar)	830 psi (57 bar)	660 psi (45 bar)	--	--

*3- or 4-inch high pressure clamps not available.

Installation

WARNING: *To avoid electrocution, ALL electrical work should be done by a registered electrician, following industrial safety standards and local codes. All power must be OFF and Locked Out during installation.*

When installing valves, ensure that no foreign materials (e.g. tools, screws, welding wire, lubricants, cloths, etc.) are enclosed in the system.

Welding Instructions

CAUTION: *Inspect each valve prior to installation. When using buttweld connections on two- and three-piece body valves, clamp connections MUST be used on one or more bodies to allow service to the body o-ring(s) after installation.*

W68/W88 valves with welded connections require the following before welding:

1. Remove the stem and actuator assembly. See “Valve Removal” on page 17.
2. Remove all seals from the body.
3. Weld the body into position, ensuring that the connection is free of tension and distortion.
4. Dissipate heat away from the valve body to prevent warping.

Air Supply

Install the valves using dry, filtered air. Lubrication is not required. If using lubricated air, refer to the solenoid manufacturer’s specifications.

Pipeline Support

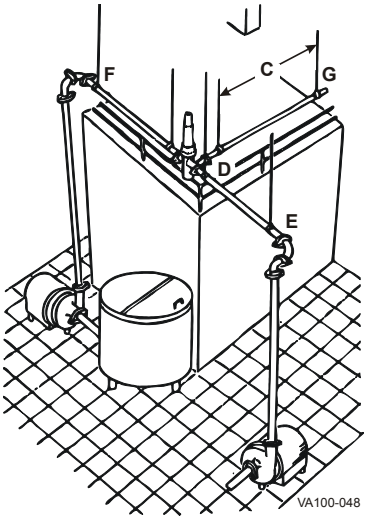

Figure 2: Pipeline Support

Install adequate supports to prevent strain on the fittings, valves, and equipment connections.

1. Install supports at least every 10 feet (3 meters) on straight runs of piping (Figure 2, item C).
2. Install supports on both sides of the valves as close as possible to the connections (Figure 2, item D).
3. Install supports at each change of pipeline direction (Figure 2, item E and F).
4. For pipelines passing through walls, floors or ceilings, provide at least 1 inch (25 mm) of clearance around the pipe to allow for expansion and contraction (Figure 2, item G).

Flow Direction

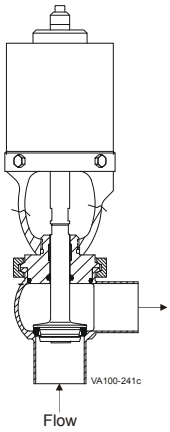

Figure 3: Flow Direction

Install the valves to close against the flow to prevent hammering.

W80 Stem Flush Adapter

W80 Series valves utilize a stem flush adapter to provide a liquid or steam barrier around the valve stem. W80 valves are designed for 14.5 psi (1 bar) maximum flush pressure with 1/4" (6.35 mm) tube O.D. connections.

Moore Positioner - Field Installation

NOTE: *Field installation of the Moore Positioner is not applicable for the 5" Air-to-Lower Diaphragm Actuator with Positioner.*

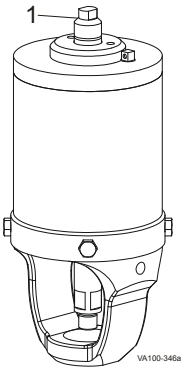

Figure 4: Actuator Indicator Stem

1. Remove the current indicator stem (Figure 4, item 1).

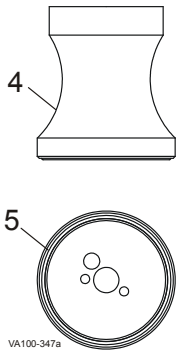

Figure 5: Adapter and Bottom View with O-ring

2. Place the adapter (Figure 5, item 4) on the existing actuator. Ensure that the o-ring (Figure 5, item 5) is in place.

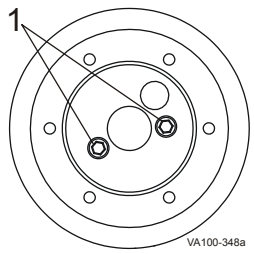

Figure 6: Top View of Adapter Fastening Cap Screws

3. Fasten the adapter in place with two cap screws (Figure 6 and Figure 7, item 1).

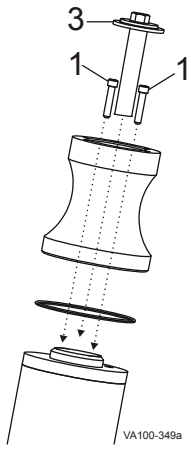

Figure 7: Installation of Cap Screws and New Stem Top

4. Install the range spring stem (Figure 7, item 3) required for the Moore Positioner.
5. Place the range spring (Figure 8, item 2) on top of the range spring stem (Figure 7, item 3).

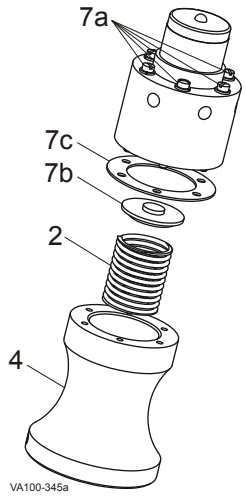

Figure 8: Assembly of Range Spring and Components

6. Position the spring seat (Figure 8, item 7b) on top of the range spring.
7. Place the cork gasket (Figure 8, item 7c) and positioner on top of the adapter (item 4).
8. Using manual pressure, compress the range spring enough to start six screws (Figure 8, item 7a) used to secure the Moore Positioner in place. DO NOT TIGHTEN SCREWS AT THIS TIME.
9. Ensure that each Moore Positioner fastening screw is started. Once all screws are started, turn each screw three turns, alternating, using a standard star pattern until tight.
10. Test and adjust it as necessary. See “Moore Positioner - Adjustments” on page 36.

Electropneumatic Positioner - Field Installation

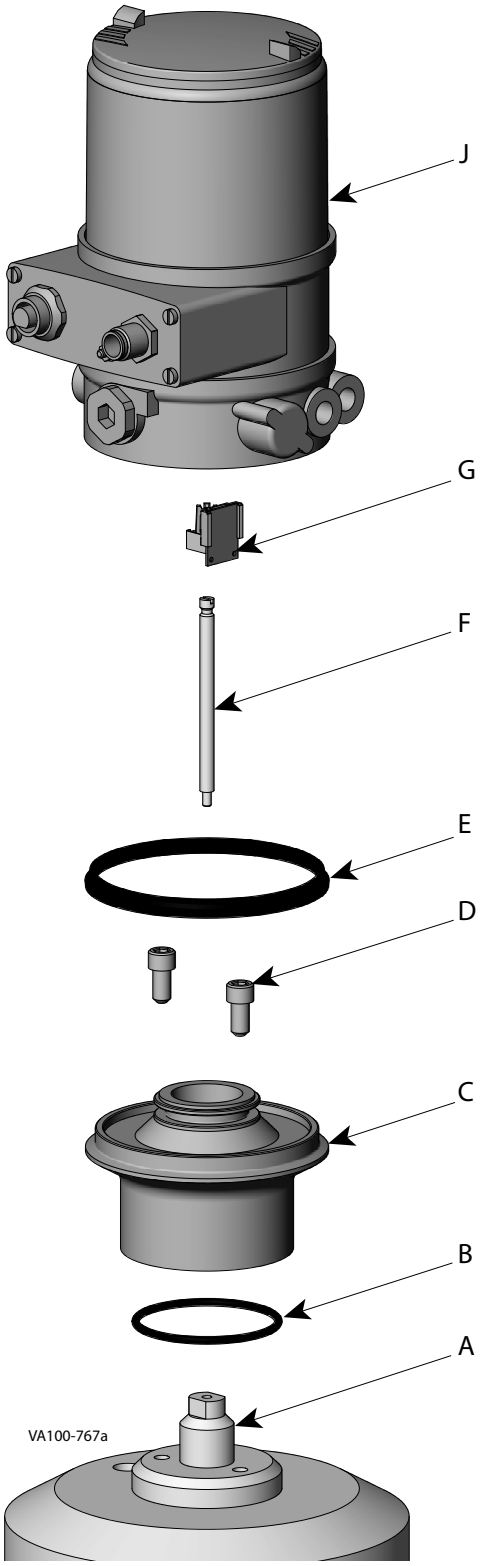

Figure 9 - Electropneumatic Positioner

1. Remove the current actuator stem (item A) and replace it with the actuator stem included in the kit. (See “Electropneumatic Positioner” on page 67 for part numbers.)
2. Insert o-ring (item B) into the bottom of the adapter (item C)..
3. Place the adapter (item C) onto the actuator and align the screw holes.
4. Install screws (item D) through the adapter (item C).
   Tip: Use a ball-point hex wrench with a small amount of lubricant on the point.
5. Install the gasket (item E) onto the adapter (item C).
6. Thread the positioner stem (item F) into the replacement actuator stem (item A).
7. Slide the sensor puck (item G) onto the positioner stem (item F).
8. Install the 8692 positioner (item J) on top of the adapter (item C) so that the sensor puck (item G) on the stem engages the slide track in the positioner.
9. Tighten the set screws in the base of the positioner.
10. Once the valve is completely installed in line, use the instructions on page 37 to perform X.TUNE automatic calibration.

NOTE: *If a fault occurs in X.TUNE, make sure that the sensor puck (item G) properly engages the slide track in the positioner as listed in step 8, above.*

Operation

Moore Positioner - Conventional Operation

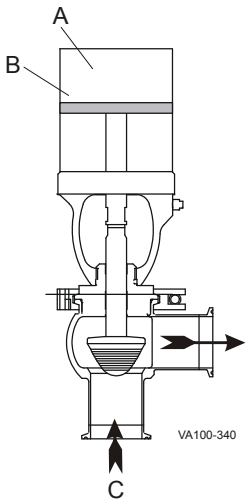

Figure 10: Air Pressure Supply

Product pressure up-stream or down-stream of the valve is controlled by changing the air pressure supplied to the actuator.

The air pressure supplied to the valve is 3 to 15 psi (0.2 to 1.0 bar).

When the product pressure drop through the valve is greater than what can be generated with 3 to 15 psi (0.2 to 1.0 bar), a Moore Positioner is added to the actuator.

Table 2: Callout table for Figure 10

A. Air-to-Air Actuator
B. 3 to 15 psi (0.2 to 1.0 bar) provided to actuator
C. Product

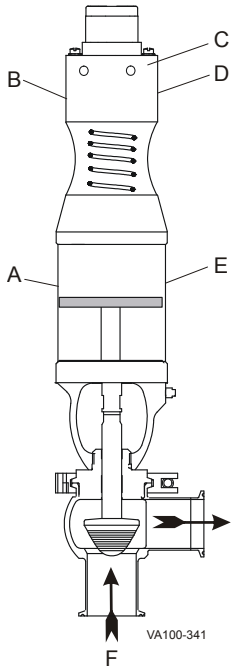

Figure 11: Moore Positioner

The Moore Positioner uses 3 to 15 psi (0.2 to 1.0 bar) air to control the plant air of 80 psi (5.5 bar). Air pressure out of the Moore Positioner is 20 to 60 psi (1.3 to 4.1 bar) required by the process.

Table 3: Callout table for Figure 11

A. Air-to-Air Actuator
B. Supply 80 psi (5.5 bar)
C. Moore Positioner
D. Signal 3 to 15 psi (0.2 to 1.0 bar) Instrument Air
E. 30 psi (2.0 bar) needed to move actuator
F. Product

Moore Positioner - Alternate Operation

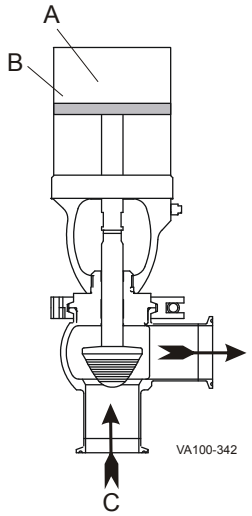

Figure 12: Method One

Method One

A mode I to P transducer is used to control the air pressure required by the process.

The Moore Positioner is not used due to a reduction in response and accuracy every time the control signal is transmitted.

Table 4: Callout table for Figure 12

A. Air-to-Air Actuator
B. Air controlled 0 to 80 psi (5.5 bar)
C. Product

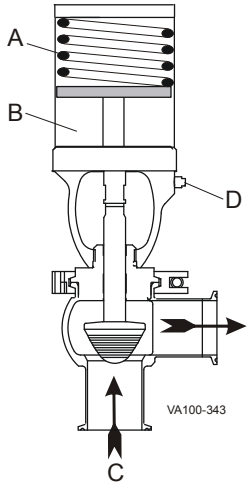

Figure 13: Method Two

Method Two

An actuator is used with a spring requiring air pressure (50 psi (3.4 bar)) to act against the product pressure and actuator spring force.

The spring force is great enough to hold the stem against any change in product pressure.

Table 5: Callout table for Figure 12

A. Spring
B. Air-to-Spring Actuator
C. Product
D. Air controlled 0 to 80 psi (5.5 bar)

Moore Positioner - Air Connections

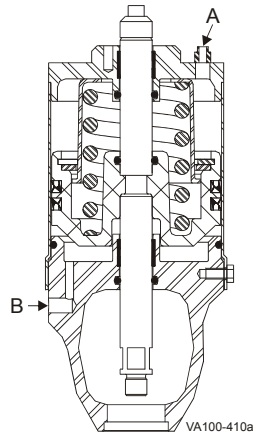

A. Vent
B. Air In

Figure 14: 4", 5", and 6" Air-to-Raise

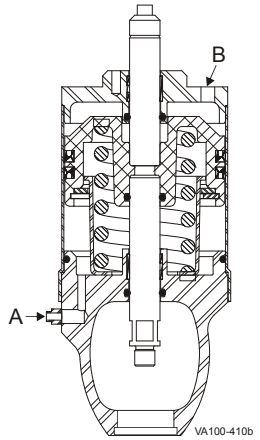

A. Vent
B. Air In

Figure 15: 4", 5", and 6" Air-to-Lower

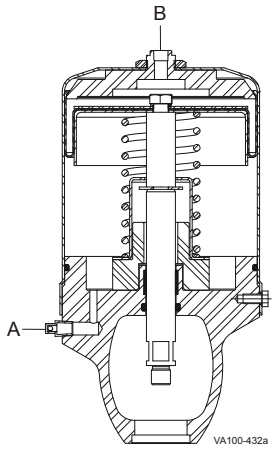

A. Vent
B. Air In

Figure 16: 5" Air-to-Lower Diaphragm Actuator

NOTE: *Actual air pressure values may vary depending on the valve size, actuator size, holding pressure requirements and spring selection.*

4", 5", and 6" Air-to-Raise

- 4" and 5" Air Pressure Range = minimum 50 psi to maximum 90 psi (min. 3.4 bar to max. 6.1 bar)
- 6" Air Pressure Range = minimum 75 psi to maximum 90 psi (min. 5.1 bar to max. 6.1 bar)
- 1/8"-27 NPT Threads

4", 5", and 6" Air-to-Lower

- 4" and 5" Air Pressure Range = minimum 50 psi to maximum 90 psi (min. 3.4 bar to max. 6.1 bar)
- 6" Air Pressure Range = minimum 75 psi to maximum 90 psi (min. 5.1 bar to max. 6.1 bar)
- 1/8"-27 NPT Threads

5" Air-to-Lower Diaphragm Actuator

- 3-15 psi Control Air; 45 psi (3.1 bar) maximum air pressure
- 1/8"-27 NPT Threads

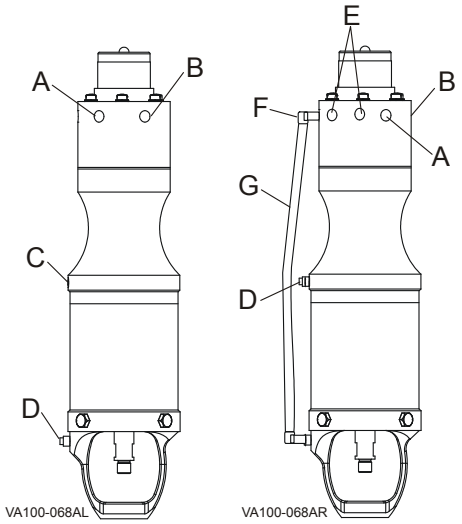

Air line connections to Moore Positioner Air-to-Lower

Air line connections to Moore Positioner Air-to-Raise

Figure 17: Moore Positioner - AL/AR

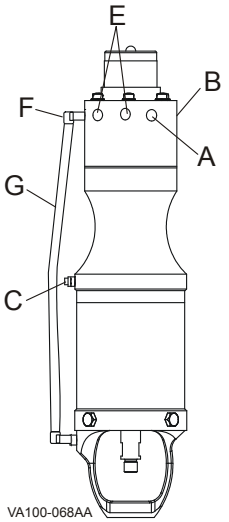

Air line connections to Moore Positioner Air-to-Air

Figure 18: Moore Positioner - AA

NOTE: *Moore Positioner is available for 4", 5", and 6" Air-to-Raise and Air-to-Lower actuators.*

NOTE: *Item C, Plug Port, is not applicable on the 5" Air-to-Lower Diaphragm Actuator with Positioner.*

Table 6: Callouts for Figure 17 & Figure 18

A. 3 to 15 psi (0.2 to 1.0 bar) Instrument Air In
B. 50-75 psi (3.4-5.2 bar) Line Air Supply (60 psi (4.1 bar) desired; 45 psi (3.1 bar) max.) for 5" Diaphragm Actuator with Positioner
C. Plug Port
D. Air Vent
E. Plug Load and Aux Load Ports (Vented Air Plug)
F. Valve Port
G. Poly-Flo Air Tube

Electropneumatic Positioner - Operation

The position measuring system (stem and puck sensor) records the current position (POS) of the pneumatic actuator. The position controller compares this actual position value with the set-point value (CMD), which is definable as norm signal. In case of a control deviation (Xd1), a voltage signal is sent to the control system as a manipulated variable.

If there is a positive control difference in single-acting (air-to-spring) actuators, the air inlet solenoid valve is controlled via output B1.

If the control difference is negative, the bleed, or exhaust, solenoid valve is controlled via output E1. In this way the position of the actuator is changed until control difference is zero.

Z1 represents a disturbance variable in the system such as pressure spike or flow increase/decrease.

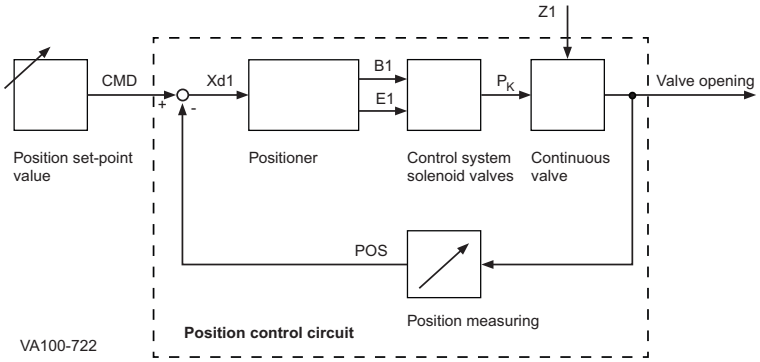

Figure 19: Signal flow plan of position controller

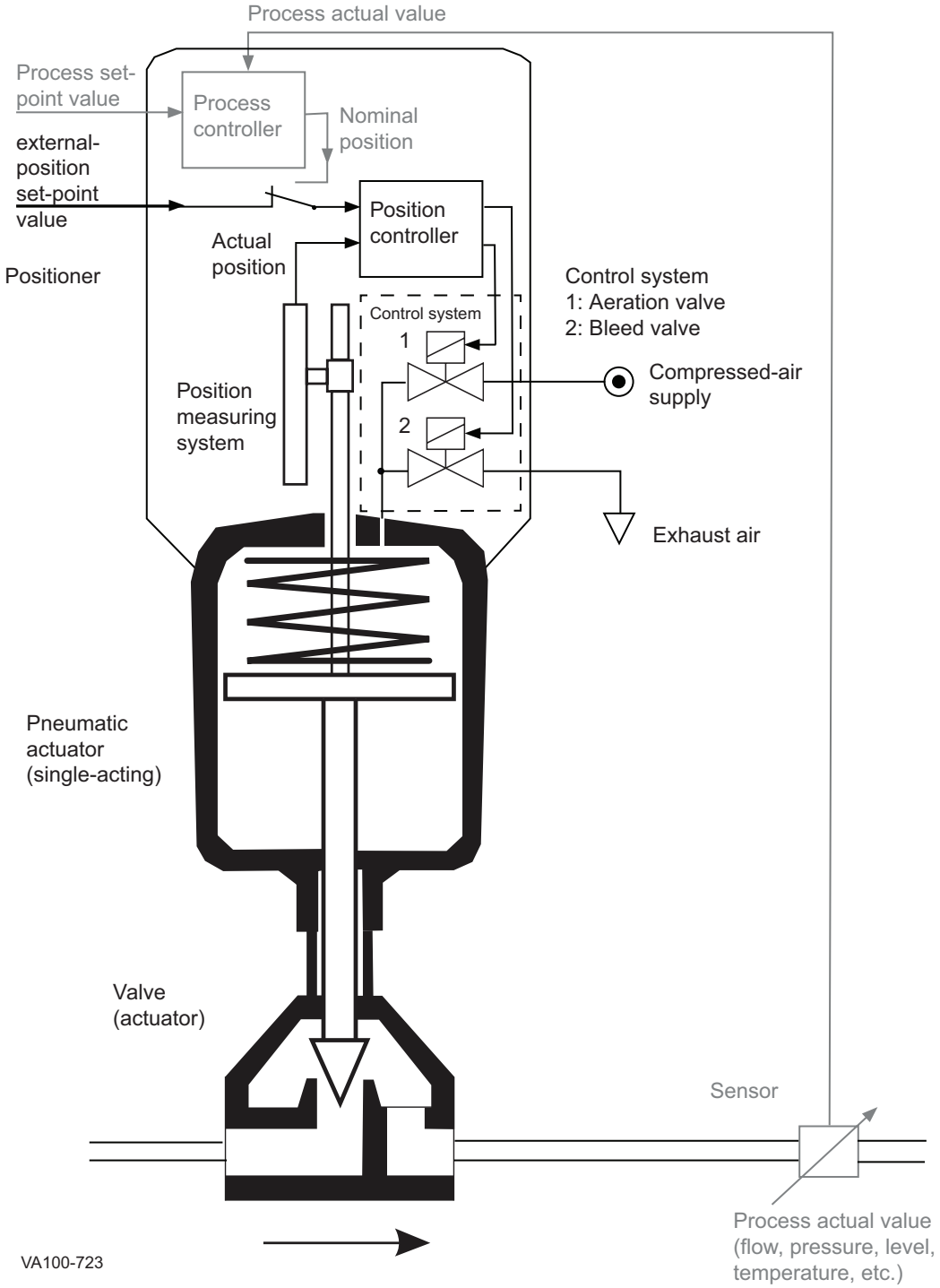

The black lines describe the function of the position controller (Type 8692). The gray lines illustrate functions typically performed by an external process controller or a more advanced control head (Type 8693).

Figure 20: Functional diagram of positioner with air-to-spring actuator

Electropneumatic Positioner - Air Connections

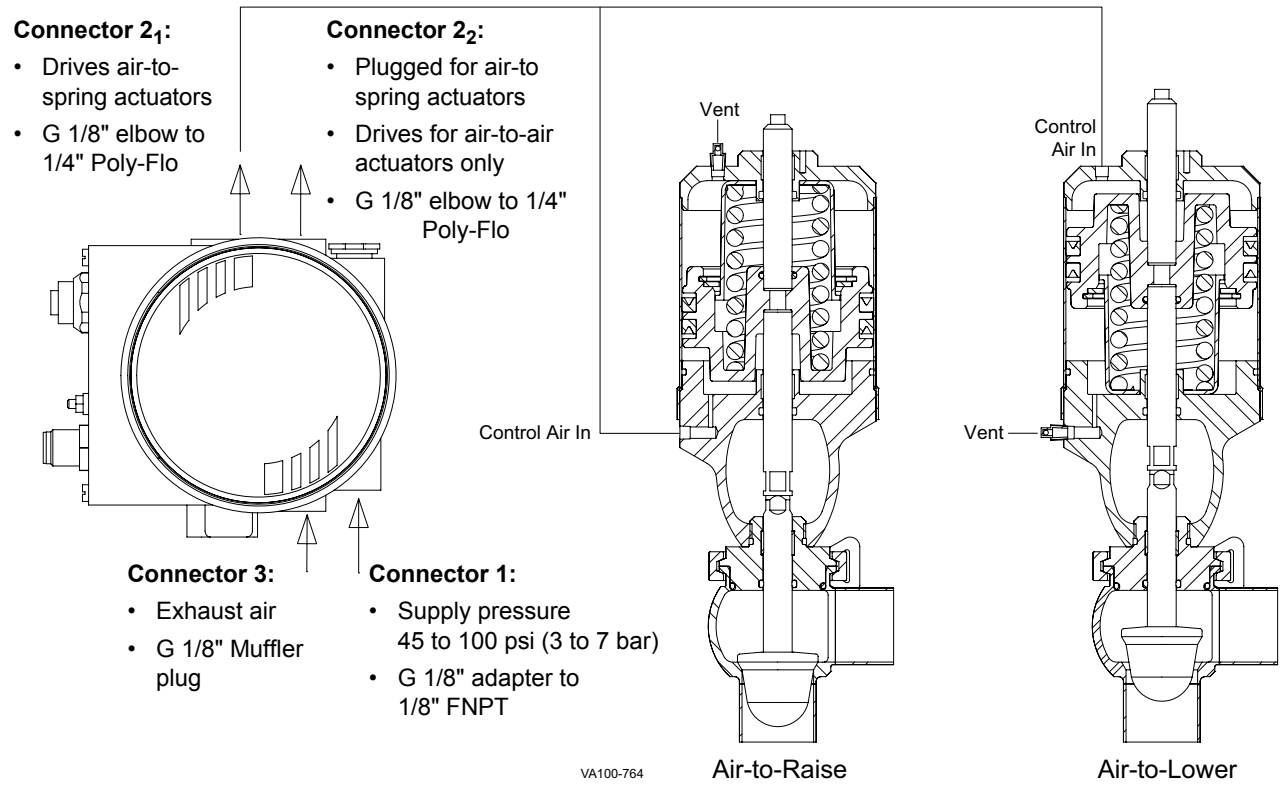

Electropneumatic Positioner - Electrical Connections

8692 Electrical Terminals (for No Bus)

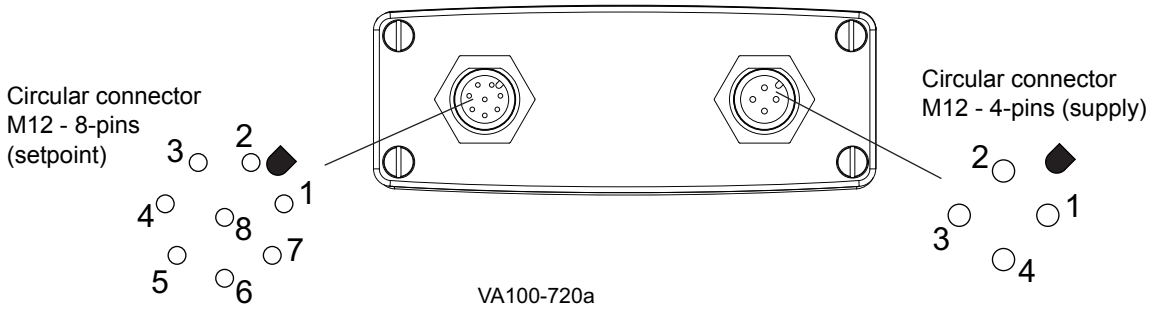

Circular connector M12 - 8-pins (setpoint	
Pin	**Configuration**
8	Setpoint + (0/4-20 mA / 0-5/10 V
7	Setpoint GND

Circular connector M12 - 8-pins (in/output signal)*	
Pin	**Configuration**
6	Analog feedback +
5	Analog feedback GND
4	Binary output 1
3	Binary output 2
2	Binary output GND
1	Binary output +

Circular connector M12 - 4-pins (supply	
Pin	**Configuration**
1	Operating voltages + 24 VDC
3	Operating voltage GND

* with the option analog feedback or binary output

8692 Electrical Terminals (for DeviceNet)

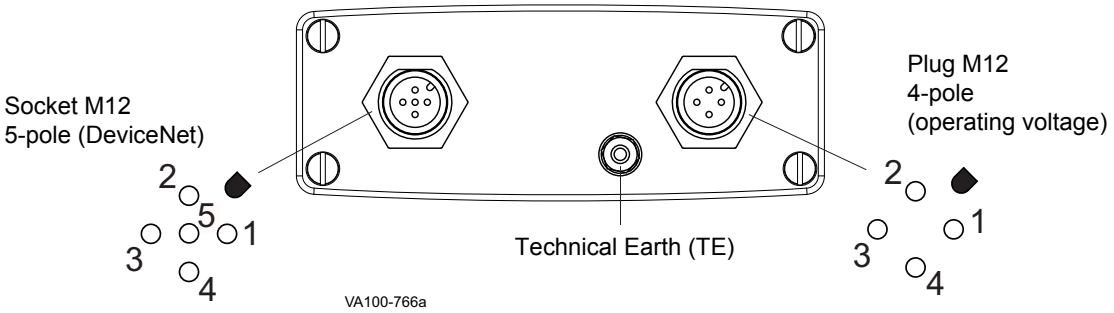

Circular connector M12 - 5-pins (bus connection)	
Pin	**Configuration**
5	CAN L (blue)
4	CAN H (white)

Circular connector M12 - 4-pins (supply)	
Pin	**Configuration**
1	Operating voltages + 24 VDC
3	Operating voltage GND

8694 Electrical Terminals (for AS-I)

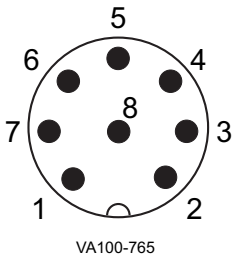

Pin	Configuration
1	Setpoint + (0/4 – 20 mA / 0-5/10 V)
2	Setpoint GND
8	Analog position feedback +
7	Analog position feedback GND
5	Binary input +
4	Operating voltage + 24 V DC
3	Operating voltage GND

(Kit includes M16 x 1.5 meter long flat cable adapter.)

3-Position Actuator - Operation

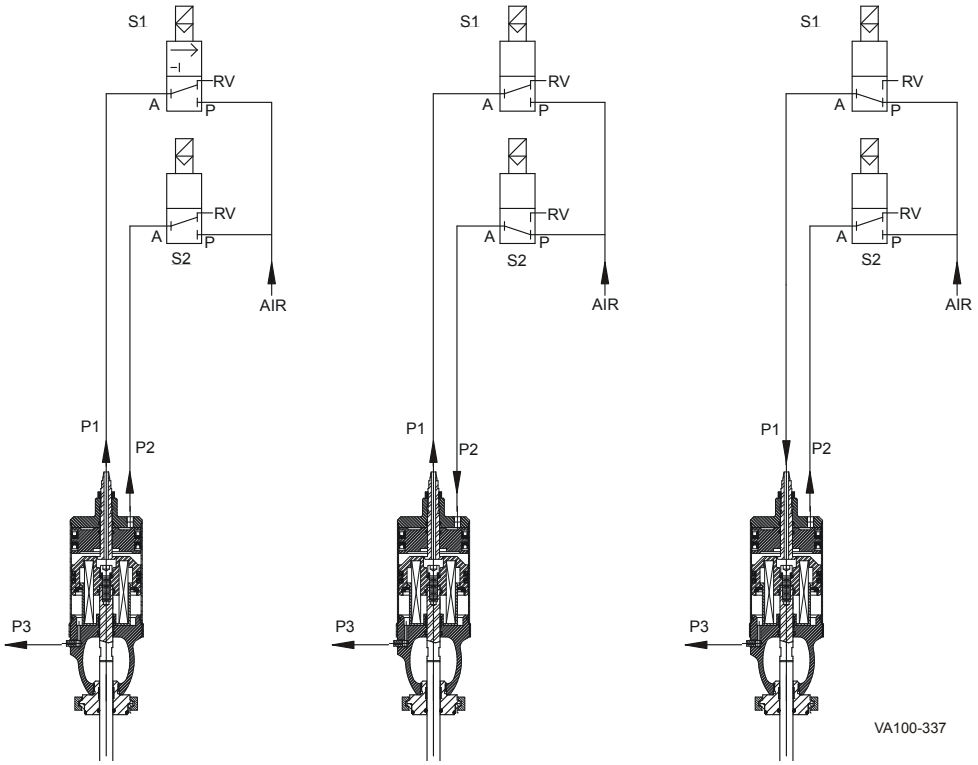

S1. Solenoid 1
S2. Solenoid 2
P1. P1 Vent
P2. P2 Vent
P3. P3 Vent
RV. R-Vent

Position 1

- Valve fully closed

Position 2

- Valve Partially Open
- Air at P2
- Vent at P1 & P3
- Adjustable Limit Stop

Position 3

- Valve Fully Open
- Air at P1
- Vent at P2 & P3

Figure 21: 3-Position Actuator (AL) Function with External Solenoids

3-Position Actuator - Air Connections

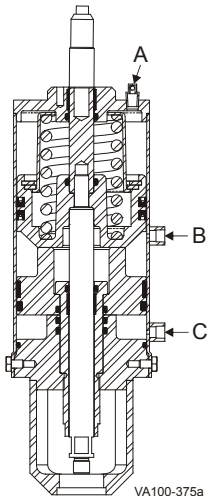

A. Vent
B. Full Air In
C. 3-Position Air In

Figure 22: 4" Air-to-Raise, 3-Position

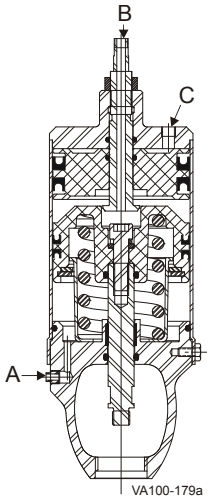

A. Vent
B. Full Air In
C. 3-Position Air In

Figure 23: 4" Air-to-Lower, 3-Position

NOTE: *Actual air pressure values may vary depending on the valve size, actuator size, holding pressure requirements and spring selection.*

4" Air-to-Raise, 3-Position

- 4" and 5" Air Pressure Range = minimum 50 psi to maximum 90 psi (3.4 bar to 6.1 bar)
- 6" Air Pressure Range = minimum 75 psi to maximum 90 psi (5.1 bar to 6.1 bar)
- 1/8"-27 NPT Threads

4" Air-to-Lower, 3-Position

- 4" and 5" Air Pressure Range = minimum 50 psi to maximum 90 psi (3.4 bar to 6.1 bar)
- 6" Air Pressure Range = minimum 75 psi to maximum 90 psi (5.1 bar to 6.1 bar)
- 1/8"-27 NPT Threads

Maintenance

Maintenance Intervals

Maintain adequate stock of replacement parts. See the items in bold beginning on page 26 for recommended spare parts.

Maintenance intervals should be determined by the user and specific application, based on the following conditions:

- Daily operation period
- Switching frequency
- Application parameters such as temperature, pressure, and flow
- Product type

Inspection

DANGER: *Do not put a hand into the yoke or body of a pneumatically actuated valve.*

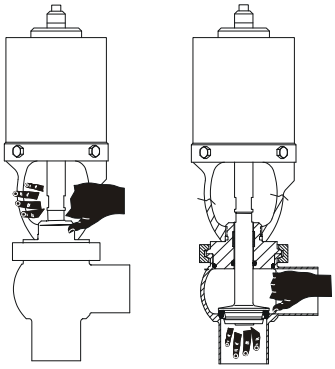

VA100-359a

Inspect the following on a regular basis:

- Actuator connections for air leaks
- Valve body and stem o-rings.
- Valve seats (If leakage occurs, see “Troubleshooting” on page 56)
- Pneumatic connections:
  - Air pressure at supply connection
  - Air lines for kinks and leaks
  - Threaded connections for tight fit
  - Threaded stress relief for tight fit
- Electrical connections secure on the control module:
  - Wire connections tight on the terminal strip
  - Clean air filter at regular intervals.

Lubrication

No lubrication is required other than as noted in the disassembly and assembly procedures. (Use food grade non-petroleum (silicone) grease on seals and o-rings.)

Apply Bostik Never-Seez® White Food Grade with PTFE or equivalent to all bolts and threaded stem parts.

Cleaning

NOTE: *Actuate each valve a minimum of twice each cycle to ensure effective cleaning and sanitizing.*

CAUTION: *Avoid splashing any liquid into the air vent of the actuator during clean up.*

Cleaning-In-Place (CIP)

CIP methods can be used to clean installed automatic valves without disassembly. Select methods based on the specific requirements of sanitarians and each application. Check with local chemical suppliers for the most effective cleaning agents and procedures.

Valve Removal

Before detaching the port connections on the valve body, perform the following:

1. Clean, rinse and drain the pipe system elements attached to the valve.
2. Remove or block the fluid and gas lines to prevent material from entering the pipe system elements attached to the valve.
3. Shut off the delivery of the control air unless it is required for the removal of the valve stem/actuator assembly from the body.
4. Disconnect the electrical supply and lockout all power.
5. If the valve has a control module with solenoid, the air and electric supply must remain ON until the valve is properly disassembled.

Removing Actuator/Stem Assembly from Valve Body

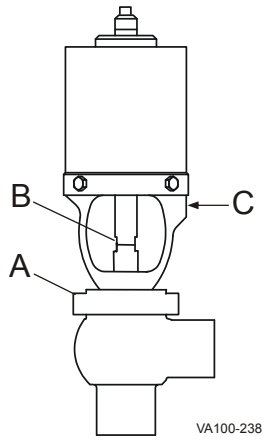

Figure 24: Removing Actuator/Stem Assembly

To remove the actuator/stem assembly from the system, do the following:

1. Stop the material flow to the valve.
2. With an air-to-raise actuator, apply air (C) to the actuator to raise the stem (item B).
3. Remove the clamp holding the body to the adapter (item A).
4. Release the air pressure. The actuator spring will aid in the separation of the adapter and the valve body.
5. Shut off the air and lock out the electrical power to the valve.
6. Disconnect the air line and electrical connections.
7. If needed, move the actuator and stem assembly to a work station.

Seat Replacement: Tri Ring Seat

1. Remove the Tri Ring seat by carefully cutting or using an o-ring tool to pull the seat out of the groove. Do not scratch or nick the metal seating surface.
2. Clean the Tri Ring groove after removing the seat.
3. Lubricate the new Tri Ring (Figure 16, item A) with acceptable cleansing solution or lubricant.
4. Place the stem through a 1-1/8 inch (30 mm) hole bored through a board, secured by a vise.
5. Start the Tri Ring as shown in Figure 16.
6. Using the installation tool, part number 102797+ (Figure 16, item B), press the Tri Ring into the plug at locations A, B, C, and D (Figure 17). If the tool is not used, DO NOT use a knife or any other sharp item that will tear or cut the Tri Ring.
7. To finish installation, press small sections of the seal, alternating from side to side (A-B-C-D), avoiding large loops of seal.
8. When properly installed, the Tri Ring seat lip will protrude slightly from the seat edge as shown in Figure 16.

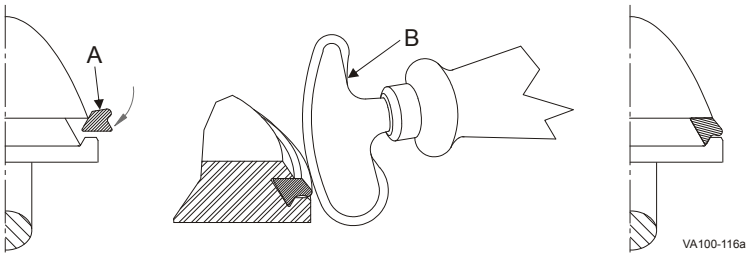

Figure 25: Installing New Tri Ring Seat

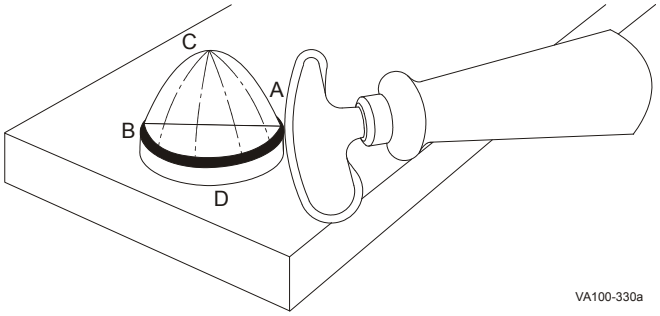

Figure 26: Pressing Tri Ring Into Plug

Servicing Actuators: U-cups, O-rings and Bearings

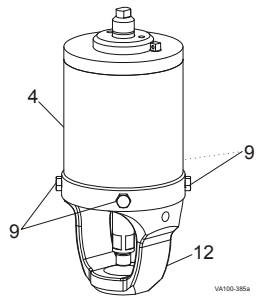

Figure 27: Remove Yoke

Figure 28: Remove Yoke O-ring and Guide Bearing

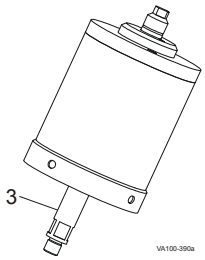

Figure 29: Pull Lower Stem

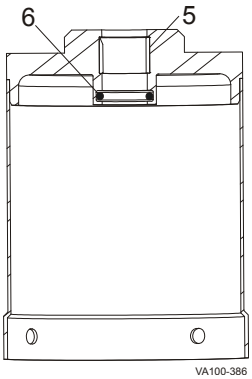

Figure 30: Remove O-ring and Bearing

Shut off the air and disconnect the air supply line to the actuator. Disconnect/lockout the electrical power to the valve.

Valves with Control Module

For control top information, please refer to publication 95-03077 (three-piece); for two-piece, see publication 95-03083. For additional product information, please see our web site at http://www.spxprocessequipment.com/sites/wcb/literature.asp.

For the Set and Forget Switch option, remove the target on the indicator stem before removing the actuator can.

O-ring and Bearing Replacement: 4”, 5” and 6" Actuator

1. Remove the cap screws (Figure 27, item 9) and pull the yoke (item 12) from the actuator cylinder (item 4).
2. Remove the yoke (Figure 28, item 4). Inspect the lower stem o-ring (item 6) and cylinder o-ring seals (item 7).
3. Remove the worn o-ring seals. Coat the new o-ring seals with Dow Corning® #7 Silicone Lubricant or equivalent, and replace them.
4. Remove the PTFE guide bearing (Figure 28, item 5) by placing a screwdriver behind the bearing to pry it away from the wall of the yoke. Use needle-nose pliers to grip and remove the bearing.
5. Pull the lower stem (Figure 29, item 3) to remove the caged spring assembly from the actuator cylinder.

⚠ ***DANGER:*** *Do not use air to remove the caged spring assembly.*

6. Remove and inspect the upper stem o-ring (Figure 30, item 6) in the top of the actuator cylinder.
7. Remove the worn o-ring seals. Coat the new o-ring seals with Dow Corning® #7 Silicone Lubricant or equivalent, and replace them.
8. Inspect and replace the PTFE guide bearing (Figure 30, item 5) in the actuator cylinder as needed.

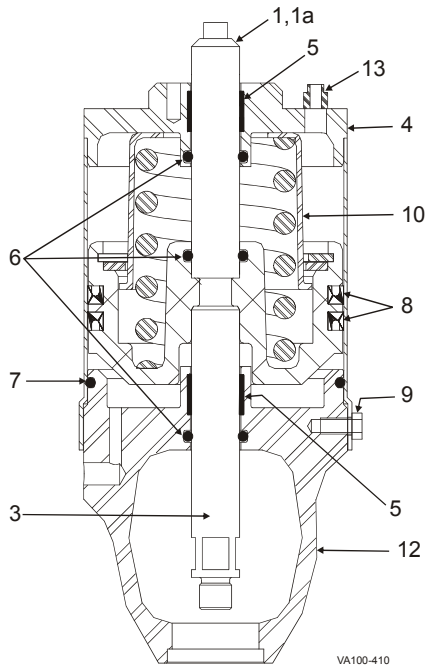

Figure 31: 4" and 5" Actuator

U-cup Replacement: 4" and 5" Actuator

1. Inspect the piston U-cup seal (Figure 31, item 8).
2. Remove the worn U-cup seal. Do not score or nick grooves in the piston (item 10).
3. Coat the new U-cup seal with Dow Corning® #7 Silicone Lubricant or equivalent.
4. Slightly stretch the lubricated seal to fit over the piston. Install the lower seal first with the "U" pointing down. Install the upper seal with the "U" pointing up. U-cup seals flare slightly at the outer edges when they are properly installed.
5. Place the piston and spring assembly in the cylinder.
6. Place the cylinder over the yoke, and install cap screws (item 9) to secure it.

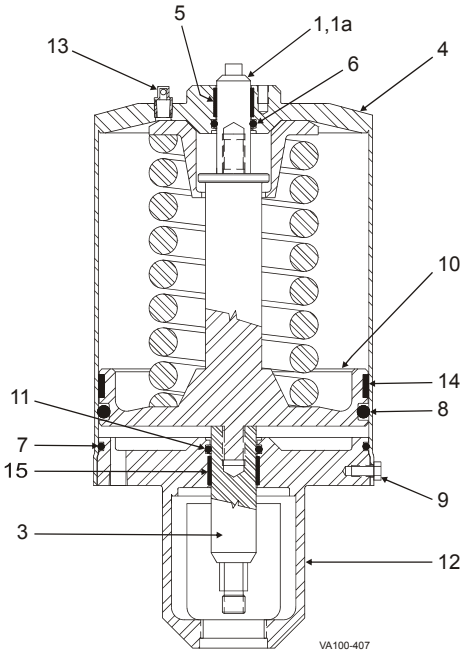

Figure 32: 6" Actuator

O-ring and Bearing Replacement: 6” Actuator

1. Inspect the piston o-ring seal (Figure 32, item 8).
2. Remove the worn o-ring seal. Do not score or nick grooves in the piston (item 10).
3. Coat the new o-ring seal with Dow Corning® #7 Silicone Lubricant or equivalent.
4. Slightly stretch the lubricated seal to fit over the piston.
5. Inspect and replace the PTFE guide bearing (item 14) on the piston as needed.
6. Place the piston and spring assembly in the cylinder.
7. Place the cylinder over the yoke, and install cap screws (item 9) to secure it.

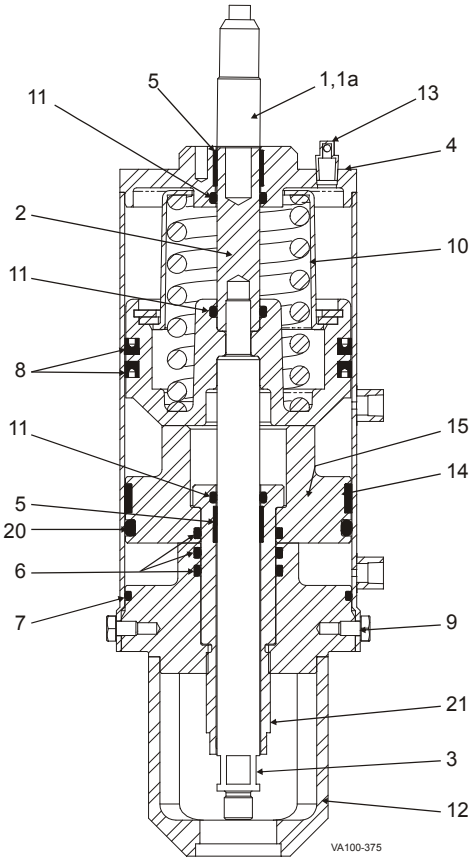

Figure 33: 4" Air-to-Raise 3-Position Actuator

U-cup, O-ring and Bearing Replacement: 4” Air-to-Raise 3-Position Actuator

1. Inspect the upper piston U-cup seal (Figure 33, item 8).
2. Remove the worn U-cup seal. Do not score or nick grooves in the piston (item 10).
3. Coat the new U-cup seal with Dow Corning® #7 Silicone Lubricant or equivalent.
4. Slightly stretch the lubricated seal to fit over the upper piston. Install the lower seal first with the "U" pointing down. Install the upper seal with the "U" pointing up. U-cup seals flare slightly at the outer edges when properly installed.
5. Clean, prime and apply Loctite® 2440 Thread Locker, according to manufacturer’s specifications, to the upper (items 1, 1a) and lower (item 3) stems. Torque the stems to 200 in/lbs.
6. Inspect the lower piston o-ring (item 20), stem o-ring (items 6 and 11) and yoke o-ring seals (item 7).
7. Remove the worn o-ring seals. Do not score or nick grooves in the piston (item 15).
8. Coat the new o-ring seals with Dow Corning® #7 Silicone Lubricant or equivalent.
9. Slightly stretch the lubricated piston seal to fit over the lower piston.
10. Inspect and replace the PTFE guide bearings (items 14 and 5) as needed.
11. Place the outer stem (item 21) in the lower piston.
12. Screw the outer stem into the yoke (item 12).

    17 turns = full stroke adjustment

    1 turn = 0.063 stroke

    Using a spanner wrench, turn the stem counter-clockwise for more stroke and clockwise for less stroke.
13. Place the piston and spring assembly in the cylinder.
14. Place the cylinder over the yoke, and install cap screws (item 9) to secure it.

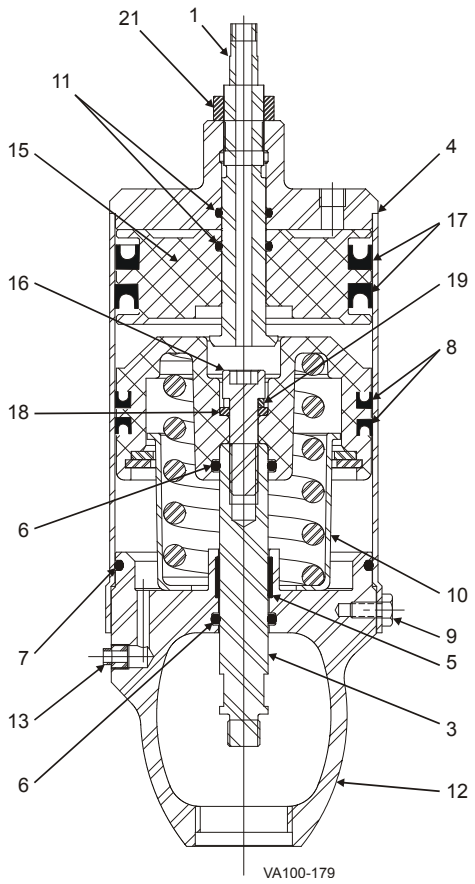

Figure 34: 4" Air-to-Lower 3-Position Actuator

U-cup, O-ring and Bearing Replacement: 4” Air-to-Lower 3-Position Actuator

1. Inspect the lower piston U-cup seal (Figure 34, item 8).
2. Remove the worn U-cup seal. Do not score or nick grooves in the piston (item 10).
3. Coat the new U-cup seal with Dow Corning® #7 Silicone Lubricant or equivalent.
4. Slightly stretch the lubricated seal to fit over the lower piston. Install the lower seal first with "U" pointing down. Install the upper seal with the "U" pointing up. U-cup seals flare slightly at the outer edges when properly installed.
5. Inspect the stem o-ring seal (item 6).
6. Remove the worn o-ring seal. Do not score or nick grooves in the piston.
7. Coat the new o-ring seal with Dow Corning® #7 Silicone Lubricant or equivalent.
8. Slightly stretch the lubricated seal to fit over the lower piston.
9. Inspect and replace the PTFE guide bearing (item 5) on the piston as needed.
10. Connect the piston and spring assembly to the stem (item 3) with the bolt (item 16).
11. Assemble the piston and spring assembly to the yoke (item 12).
12. Inspect the upper piston U-cup seal (item 17).
13. Remove the worn U-cup seal. Do not score or nick grooves in the piston (item 15).
14. Coat the new U-cup seal with Dow Corning® #7 Silicone Lubricant or equivalent.
15. Slightly stretch the lubricated seal to fit over the upper piston. Install the lower seal first with the "U" pointing down. Install the upper seal with the "U" pointing up. U-cup seals flare slightly at the outer edges when properly installed.
16. Inspect the upper stem o-ring seal (item 11).
17. Remove the worn o-ring seal. Do not score or nick grooves in the cylinder top and upper piston.
18. Coat the new o-ring seal with Dow Corning® #7 Silicone Lubricant or equivalent.
19. Install the lubricated seal in the upper piston and cylinder top.
20. Assemble the upper piston and stem (item 1) to the cylinder. Secure them with a hex nut (item 21). Place the cylinder over the yoke, and install cap screws (item 9) to secure it.
21. Adjust the mid-position by loosening the hex nut (item 21) and turning the stem (item 1).

5" Air-to-Lower Diaphragm Actuator Disassembly

1. Loosen the hex nut (Figure 35, item 1) on top of the actuator.
2. Remove the four cap screws (item 9).
3. Remove the yoke (item 12) from the assembly.
4. Remove the spacer (item 20) and hex nut (item 1).
5. While holding the stem, pull the inside sub-assembly from the cylinder (item 4).
6. Remove the diaphragm holder (item 8) and fold the diaphragm (item 19) over the piston (item 10).
7. Remove the cap screw (item 2) and washer (item 16) from the sub-assembly.
8. The sub-assembly is now completely disassembled.

5" Air-to-Lower Diaphragm Actuator Assembly

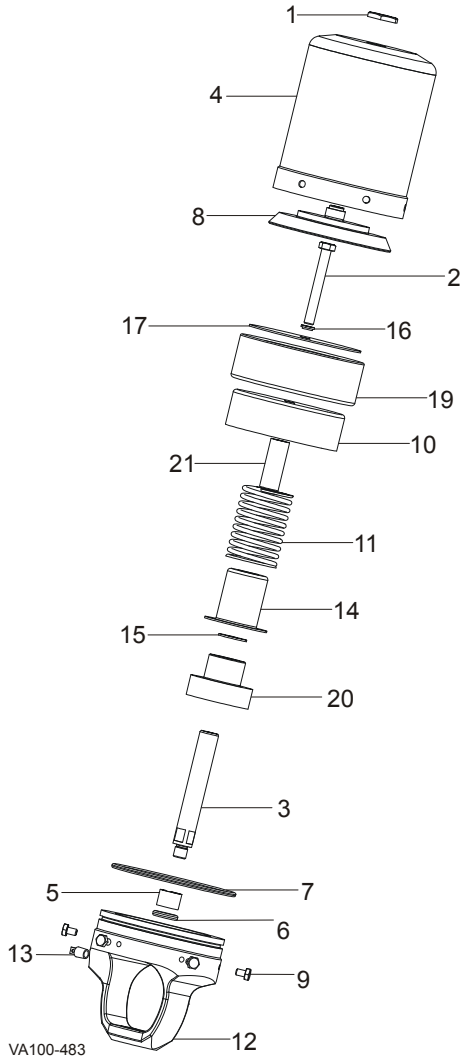

Figure 35: 5" Air-to-Lower Diaphragm Actuator

1. Apply Loctite® 242 to the threads (Figure 35, item 2).
2. Assemble in order to create the sub-assembly:
   - cap screw (item 2)
   - washer (item16)
   - diaphragm retainer (item17)
   - diaphragm with the high-pressure side up (item19)
   - piston (item10)
   - spacer (item21)
   - spring (item11)
   - spring retainer (item14)
   - washer (item15)
   - lower stem (item3)
3. Tighten the sub-assembly using two wrenches; one on the flats of the stem and another on the cap screw.
4. Unfold the diaphragm into position.
5. Lubricate the inside of the cylinder (item 4) and the outside and top of the o-ring bead on the diaphragm with Dow Corning® #7 Silicone Lubricant or equivalent.
6. Hold the sub-assembly in an upright position, then place the diaphragm holder in the diaphragm.
7. While in the upright position, insert the sub-assembly into the cylinder. Push the o-ring bead of the diaphragm into the cylinder.
8. Press the sub-assembly into the cylinder until the threaded portion of the diaphragm holder (item 8) comes through the hole in the cylinder.
9. Assemble the hex nut (item 1) to the threaded portion of the diaphragm holder. Apply Loctite® 242 to threads.
10. Place the o-rings (item 6), bearing (item 5), and spacer (item 20) on the yoke (item 12).

11. Place the sub-assembly in the yoke, and push the yoke into the cylinder.
12. Assemble them with six cap screws (item 9) and tighten them.
13. Put the air coupling on the actuator and cycle the actuator two or three times before assembling it to the valve (maximum air pressure is 45 psi (3.1 bar)).
14. Tighten the hex nut after cycling the actuator.

Reversing the Spring Action

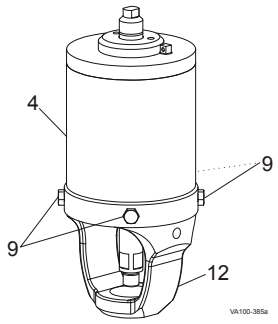

Figure 36: Remove Yoke

1. Remove the cap screws (Figure 36, item 9) and pull the yoke (item 12) from the actuator cylinder (item 4).

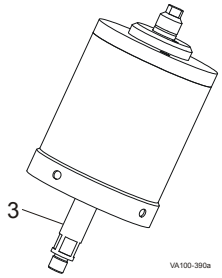

Figure 37: Pull Lower Stem

2. Pull the lower stem (Figure 37, item 3) to remove the caged spring assembly from the actuator cylinder.
3. Using a 5/8-inch wrench on the lower stem (Figure 37, item 3) and a 3/8-inch wrench on the upper stem (item 2), unscrew and remove the two actuator stem halves.

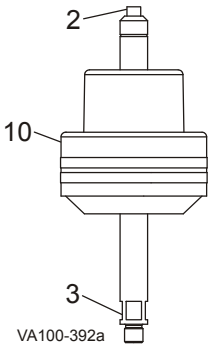

Figure 38: Air-to-Raise Configuration

4. Turn the piston/spring assembly (Figure 38, item 10) over.

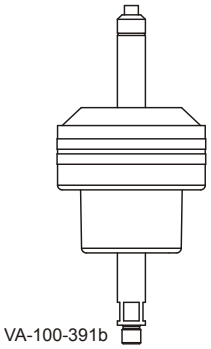

Figure 39: Air-to-Lower Configuration

5. Install the actuator stem halves in the piston/spring assembly and tighten to 200 in/lbs. See Figure 38 for Air-to-Raise configuration; Figure 39 for Air-to-Lower configuration.
6. Coat the U-cup and o-ring seals with Dow Corning® #7 Silicone Lubricant or equivalent.

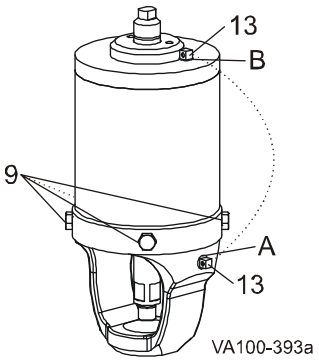

Figure 40: Cap Screws and Vent Plug

7. Install the piston/spring assembly in the actuator cylinder and assemble them with cap screws (Figure 40, item 9).
8. Reverse the vent plug (Figure 40, item 13) as follows:

   Air-to-Raise Actuator: The vent plug must be located on TOP of the actuator in Port B (Figure 40, item B).

   Air-to-Lower Actuator: The vent plug must be located on the SIDE of the yoke in Port A (Figure 40, item A).

Moore Positioner - Adjustments

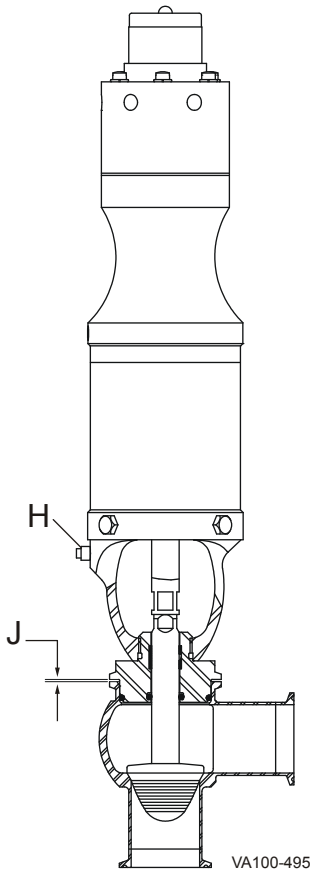

Figure 41: Body to Adapter Gap

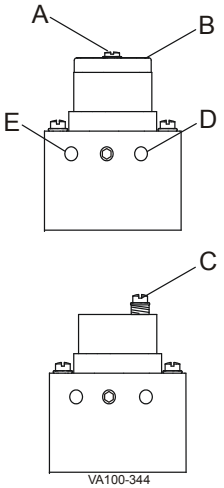

Figure 42: Air-to-Lower

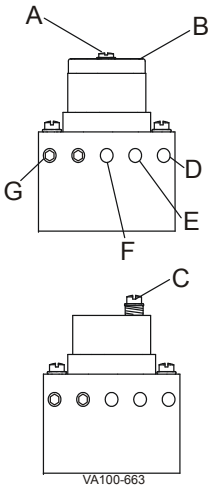

Figure 43: Air-to-Raise

A zero adjustment is made to the Moore Positioner to provide proper seat compression. The zero-adjusting screw (Figure 42 and Figure 43, item C) is located under the top cover (item B) of the Moore Positioner. For air-to-raise units, air from the "valve" port (Figure 43, item F) is connected to the yoke air port, Figure 41, item H.

1. Apply 50-75 psi (3.4-5.2 bar) of air pressure to the positioner "supply" air port (Figure 42 and Figure 43, item D).
2. Remove the cover cap screw (Figure 42 and Figure 43, item A).
3. Remove the cover (Figure 42 and Figure 43, item B) to access the zero-adjusting screw (item C).
4. Apply air pressure:

   Direct acting positioners:
   Apply 3 psi (0.2 bar) of air pressure for air-to-raise actuators, OR 15 psi (1.0 bar) of air pressure for air-to-lower actuators, to the positioner "instrument" air port (Figure 42 and Figure 43, item E).

   Reverse acting positioners:
   Apply 3 psi (0.2 bar) of air pressure for air-to-lower actuators, OR 15 psi (1.0 bar) of air pressure for air-to-raise actuators, to the positioner "instrument" air port (Figure 42 and Figure 43, item E).
5. Turn the zero-adjusting screw counter-clockwise to extend the valve stem and achieve a 0.062" ± 0.31" (1.575 ± 0.787 mm) dimension (Figure 41, item J).
6. In some cases, the valve may be required to shut off or open at a specific instrument pressure. If required, set the instrument signal at a specific pressure and turn the zero-adjustment screw until the valve reaches the required position. When set correctly, a slight change in instrument pressure will start to move the valve.

NOTE: *For Air-to-Air, use Air-to-Raise (see Figure 43). The second air supply is plumbed to the "load" port, item G.*

X.TUNE (Autotune) Procedure for Electromagnetic Positioner

1. Ensure that the correct assembly and air connections exist between the positioner and the valve. See “Electropneumatic Positioner - Electrical Connections” on page 22.
2. Connect the main air supply pressure to Connector 1 of the positioner.
3. Attach the 24V DC operating voltage to the 4-pin connection of the positioner.
4. Turn the operating voltage on.
5. When the operating voltage has been switched on, the positioner is at the process operating level in the automatic operating state.
6. Start Autotune by selecting X.TUNE in the main menu (MAIN) using the arrow keys.
7. Hold down the right selection key (RUN) for approx. 3 seconds (see countdown on display).
8. When the automatic adjustment completes, the message "X.TUNE READY" * is indicated.
   *If a fault occurs: "TUNE err/break" displays.
9. Press any key to return to the main menu.
10. To stop X.TUNE, press the left or right selection key (STOP).

Parts Lists

W68/W88 Throttling Valve

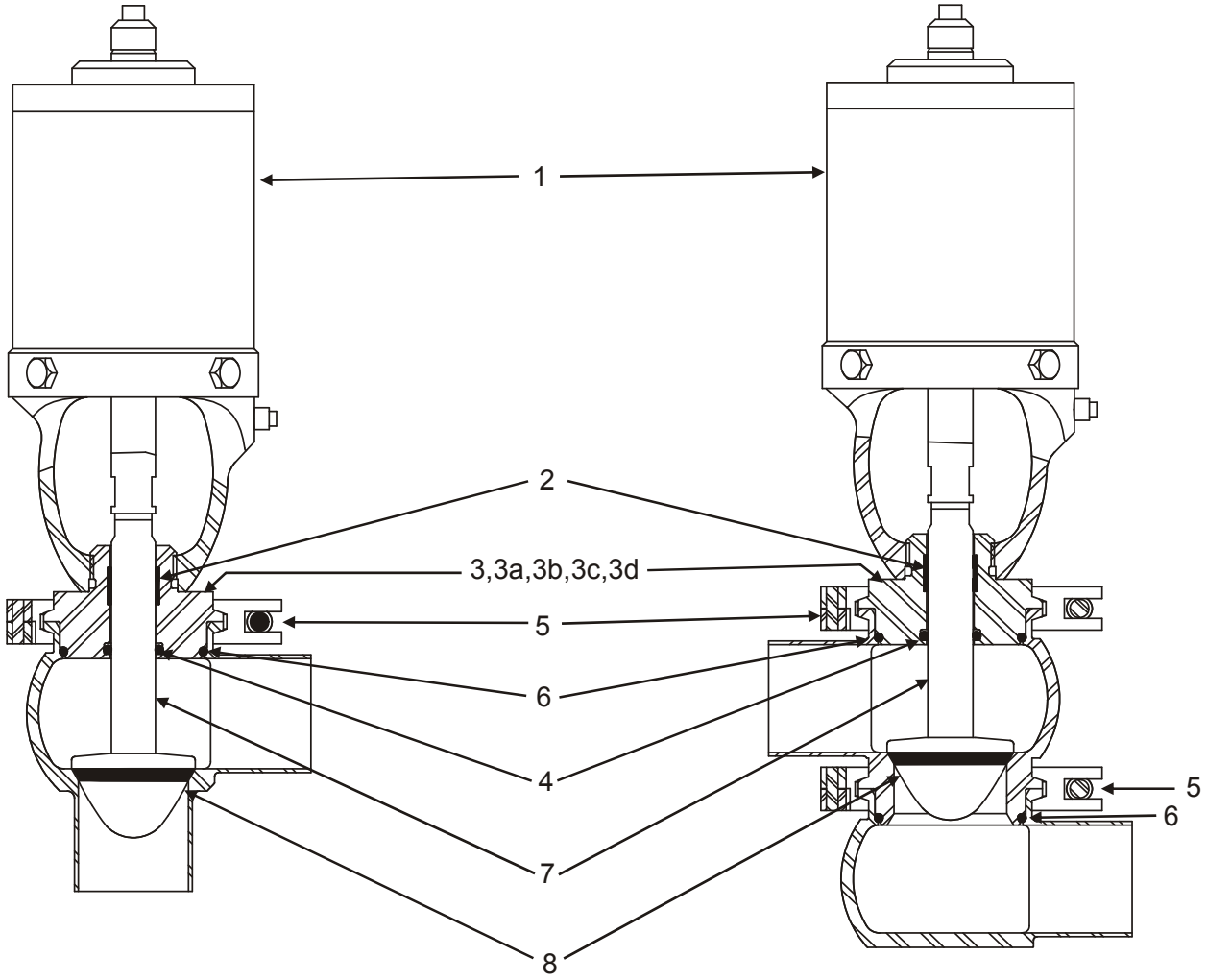

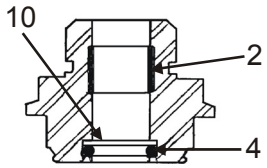

(3a)

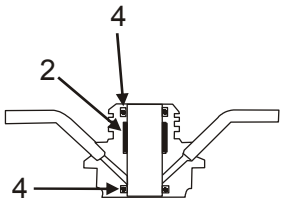

(3b)

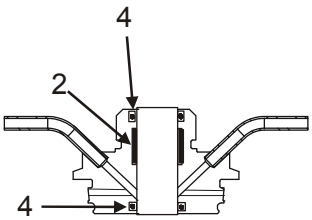

(3c)

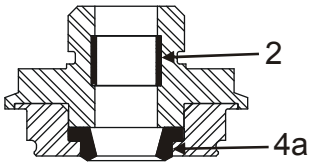

(3d)

VA100-327

W68/W88 Throttling Valve

	Item	Part Description		1-1/2"	2"	2-1/2"	3"	4"	Notes
		Control Top		Contact Factory					
	1	Actuator		***					
*	**2**	**Bearing**		102757+	102757+	102757+	102757+	102757+	
	3	Adapter, W60 (Std.)		102406+	102407+	102408+	102409+	102410+	
	3a	Adapter, High Pressure	W60	109293+	109294+	109295+	N/A	N/A	
			W80	116925+	116926+	116927+	N/A	N/A	
	3b	Adapter, W80		106291+	106292+	106293+	106294+	106295+	2
	3c	Adapter, W81A		117785+	117786+	117787+	117788+	117789+	3
	3d	Adapter, Wiping Stem Seal		117879+	117880+	117881+	117882+	117883+	1
*	**4**	**O-ring**	**EPDM**	E70210	E70210	E70210	E70210	E70210	
			FKM	V70210	V70210	V70210	V70210	V70210	
*	**4a**	**Wiping Stem Seal**	**EPDM**	116183+	116183+	116183+	116183+	116183+	1
			FKM	115626+	115626+	115626+	115626+	115626+	1
	5	Clamp	Standard	119-30	119-33	119-34	119-51	119-87	
			High Pressure	119-271	119-272	119-273	N/A	N/A	4
*	**6**	**O-ring, Body**	**EPDM**	E70223	E70228	E70232	E70236	E70244	
			FKM	V70223	V70228	V70232	V70236	V70244	
	7	Stem (less seat ring) - see note 5, below.							5
*	**8**	**Seat Ring, Tri Ring**	**EPDM**	107692+	107695+	107048+	102488+	107698+	
			FKM	107983+	107986+	107982+	107974+	107989+	
	10	High Pressure Backup Ring		BURT210	BURT210	BURT210	N/A	N/A	

PL5027-CH9

Notes

* Recommended Spare Parts

*** See Actuator Parts Lists

1. Wiping Stem Seal Adapter and Wiping Stem Seal options are available for the W60 Series valves
2. W80 Adapter allows for liquid or steam flush of the stem o-ring only.
3. W81A Adapter allows for liquid or steam flush of the stem o-ring and body o-ring. Only available on one-piece body configurations.
4. High Pressure Body Clamp is only required for valves equipped with the High Pressure Adapter (item 3a).
5. For item 7, see W68/W88 Valve Stems chart.

W68/W88 Throttling Valve, Reduced Orifice for C_V 1.75, 2.5, 5.0 and 7.5

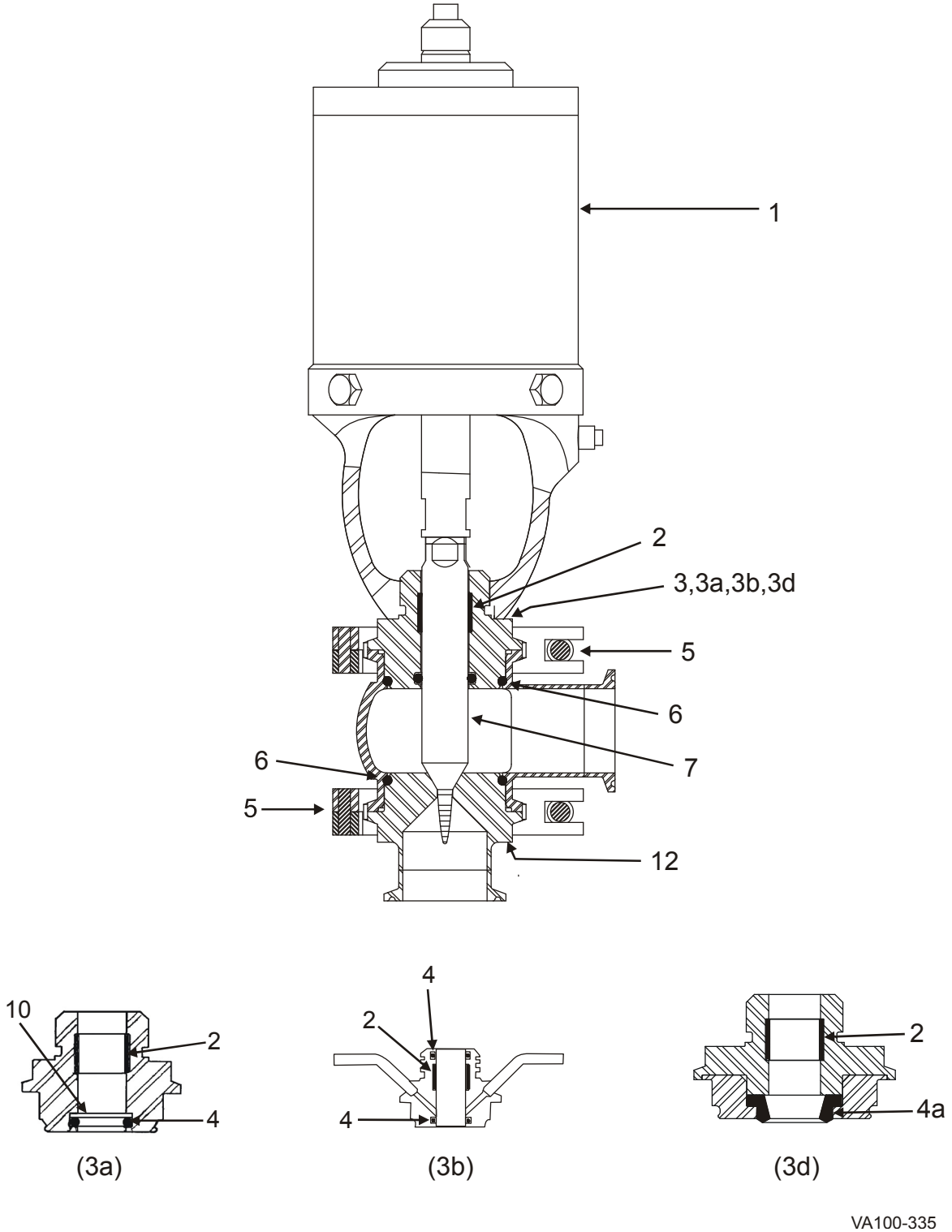

W68/W88 Throttling Valve, Reduced Orifice for C_V 1.75, 2.5, 5.0 and 7.5

	Item #	Part Description		1"	1-1/2"	Notes
		Control Top		Contact Factory		
	1	Actuator		***		
*	**2**	**Bearing**		102757+	102757+	
	3	Adapter, W60 (Std)		102406+	102406+	
	3a	Adapter, High Pressure	W60	109293+	109293+	
			W80	116925+	116925+	
	3b	Adapter, W80		106291+	106291+	2
	3d	Adapter, Wiping Stem Seal		117879+	117879+	1
*	**4**	**O-ring**	**EPDM**	E70210	E70210	
			FKM	V70210	V70210	
*	**4a**	**Wiping Stem Seal**	**EPDM**	116183+	116183+	1
			FKM	115626+	115626+	1
	5	Clamp	Standard	119-30	119-30	
			High Pressure	119-271	119-271	3
*	**6**	**O-ring, Body**	**EPDM**	E70223	E70223	
			FKM	V70223	V70223	
	7	Stem (less seat ring) - see note 5, below				5
	10	High Pressure Backup Ring		BURT210	BURT210	
	12	Seat Insert	Buttweld, C_V 1.75	114339+	114320+	4
			Buttweld, C_V 2.5	114340+	114321+	4
			Buttweld, C_V 5.0	114341+	114322+	4
			Buttweld, C_V 7.5	114342+	114323+	4
			S-Line, C_V 1.75	114343+	114324+	4
			S-Line, C_V 2.5	114344+	114325+	4
			S-Line, C_V 5.0	114345+	114326+	4
			S-Line, C_V 7.5	114346+	114327+	4

PL5027-CH10

Notes

* Recommended Spare Parts

*** See Actuator Parts Lists

1. Wiping Stem Seal Adapter and Wiping Stem Seal options are available for W60 Series valves only.
2. W80 Adapter allows for liquid or steam flush of the stem o-ring only.
3. High Pressure Body Clamp is only required for valves equipped with High Pressure Adapter (item 3a).
4. Buttweld or S-Line connections refer to process piping connection.
5. For Item 7, see W68/W88 Reduced Orifice Valve Stems chart.

W68R/W88R Reverse Throttling Valve

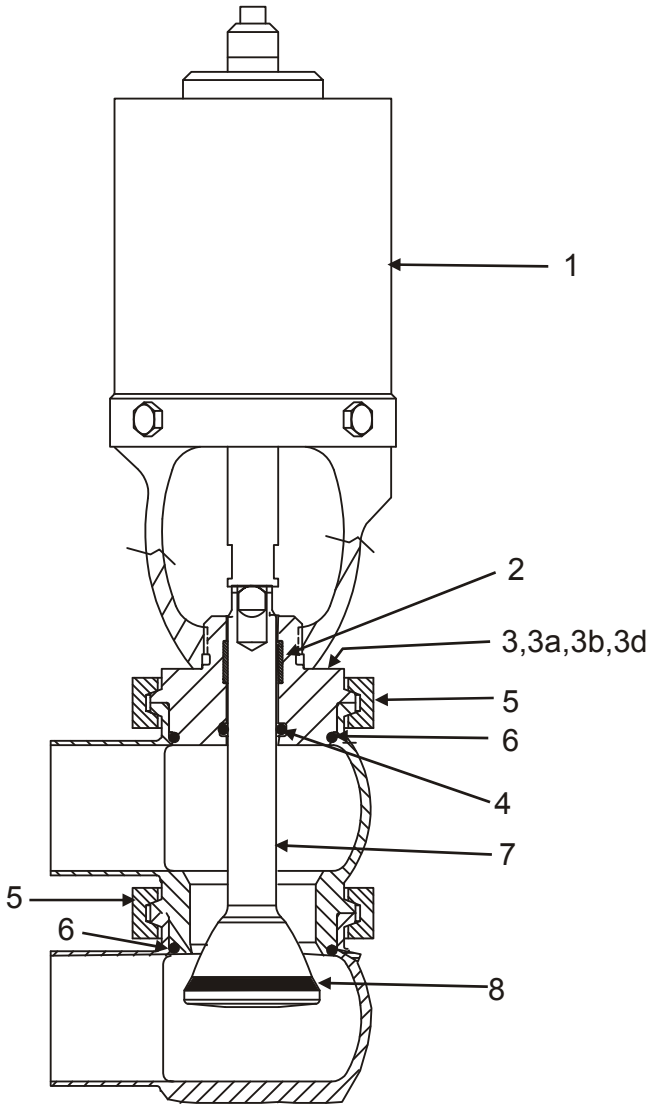

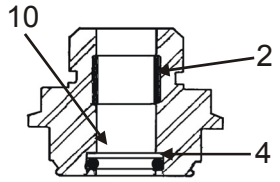

(3a)

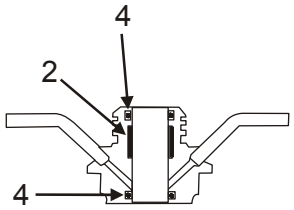

(3b)

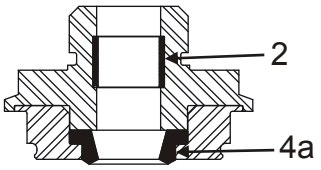

(3d)

VA100-W68R

W68R/W88R Reverse Throttling Valve

	Item #	Part Description		1-1/2"	2"	2-1/2"	3"	4"	Notes
		Control Top		Contact Factory					
	1	Actuator		***					
*	**2**	**Bearing**		102757+	102757+	102757+	102757+	102757+	
	3	Adapter, W60 (Std.)		102406+	102407+	102408+	102409+	102410+	
	3a	Adapter, High Pressure	W60	109293+	109294+	109295+	N/A	N/A	
			W80	116925+	116926+	116927+	N/A	N/A	
	3b	Adapter, W80		106291+	106292+	106293+	106294+	106295+	
	3d	Adapter, Wiping Stem Seal		117879+	117880+	117881+	117882+	117883+	1
*	**4**	**O-ring**	**EPDM**	E70210	E70210	E70210	E70210	E70210	
			FKM	V70210	V70210	V70210	V70210	V70210	
*	**4a**	**Wiping Stem Seal**	**EPDM**	116183+	116183+	116183+	116183+	116183+	1
			FKM	115626+	115626+	115626+	115626+	115626+	1
	5	Clamp	Standard	119-30	119-33	119-34	119-51	119-87	
			High Pressure	119-271	119-272	119-273	N/A	N/A	3
*	**6**	**O-ring, Body**	**EPDM**	E70223	E70228	E70232	E70236	E70244	
			FKM	V70223	V70228	V70232	V70236	V70244	
	7	Stem (less seat ring)							4
*	**8**	**Seat Ring, Tri Ring**	**EPDM**	107692+	107695+	107048+	102488+	107698+	
			FKM	107983+	107986+	107982+	107974+	107989+	
	10	High Pressure Backup Ring		BURT210	BURT210	BURT210	N/A	N/A	

PL5027-CH11

Notes

* Recommended Spare Parts

*** See Actuator Parts Lists

1. Wiping Stem Seal Adapter and Wiping Stem Seal options are available for the W60 Series valves
2. W80 Adapter allows for liquid or steam flush of the stem o-ring only.
3. High Pressure Body Clamp is only required for valves equipped with the High Pressure Adapter
4. For item 7, see W68R/W88R Valve Stems chart.

W682/W882 Divert Throttling Valve

NOTE: *For combining/converging flows only. Do not use for flow splitting/diverging flows - use W685/W885.*

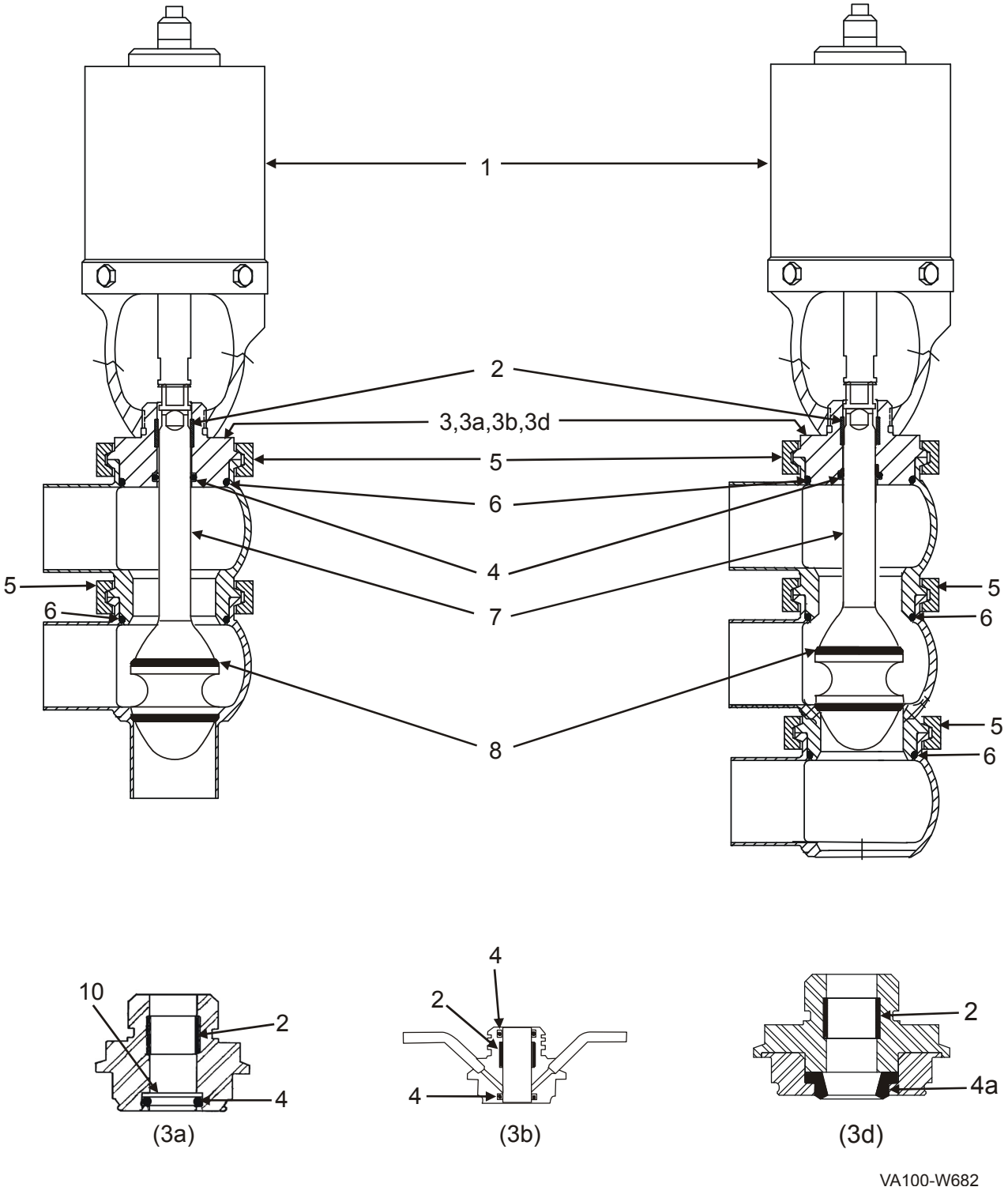

W682/W882 Divert Throttling Valve

NOTE: *For combining/converging flows only. Do not use for flow splitting/diverging flows - use W685/W885.*

	Item #	Part Description		1-1/2"	2"	2-1/2"	3"	4"	Notes
		Control Top		Contact Factory					
	1	Actuator		***					
*	**2**	**Bearing**		102757+	102757+	102757+	102757+	102757+	
	3	Adapter, W60 (Std.)		102406+	102407+	102408+	102409+	102410+	
	3a	Adapter, High Pressure	W60	109293+	109294+	109295+	N/A	N/A	
			W80	116925+	116926+	116927+	N/A	N/A	
	3b	Adapter, W80		106291+	106292+	106293+	106294+	106295+	2
	3d	Adapter, Wiping Seal		117879+	117880+	117881+	117882+	117883+	1
*	**4**	**O-ring, Stem**	**EPDM**	E70210	E70210	E70210	E70210	E70210	
			FKM	V70210	V70210	V70210	V70210	V70210	
*	**4a**	**Wiping Stem Seal**	**EPDM**	116183+	116183+	116183+	116183+	116183+	1
			FKM	115626+	115626+	115626+	115626+	115626+	1
	5	Clamp	Standard	119-30	119-33	119-34	119-51	119-87	
			High Pressure	119-271	119-272	119-273	N/A	N/A	3
*	**6**	**O-ring, Body**	**EPDM**	E70223	E70228	E70232	E70236	E70244	
			FKM	V70223	V70228	V70232	V70236	V70244	
	7	Stem (less seat ring)							4
*	**8**	**Seat Ring, Tri Ring**	**EPDM**	107692+	107695+	107048+	102488+	107698+	
			FKM	107983+	107986+	107982+	107974+	107989+	
	10	High Pressure Backup Ring		BURT210	BURT210	BURT210	N/A	N/A	

PL5027-CH12

Notes

*** Recommended Spare Parts**

*** See actuator parts lists

1. Wiping Stem Seal Adapter and Wiping Stem Seal options available for W60 Series valves only.
2. W80 Adapter allows for liquid or steam flush of stem o-ring only.
3. High Pressure Body Clamp only required for valves equipped with High Pressure Adapter (item 3a).
4. For item 7, see W682/W882 Valve Stems chart.

W685/W885 Divert Throttling Valve

NOTE: *For flow splitting/diverging flows only. Do not use for combining/converging flows - use W682/W882.*

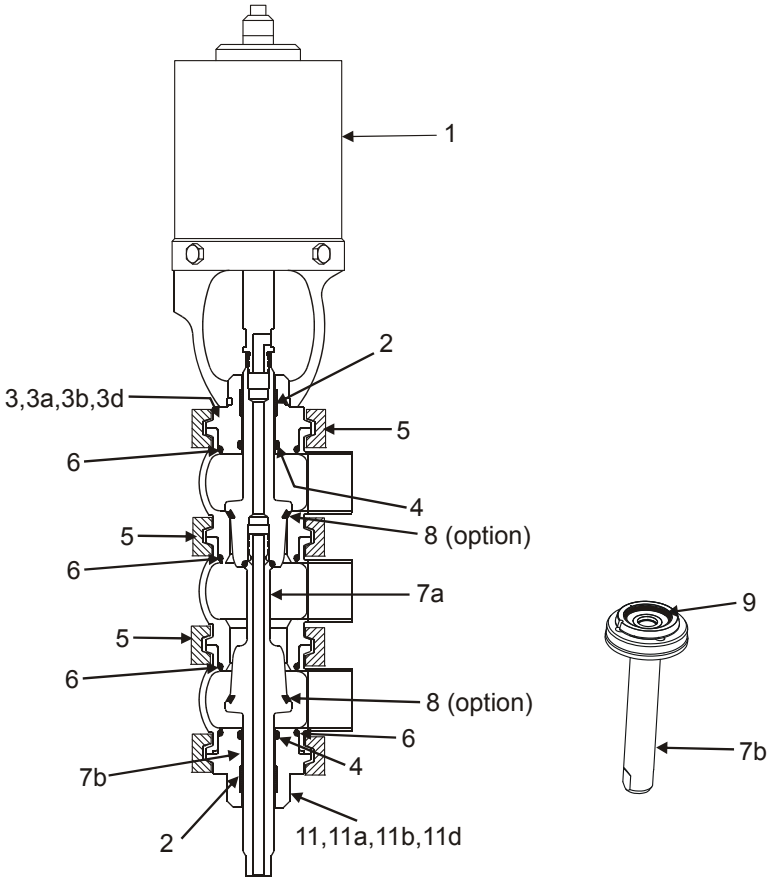

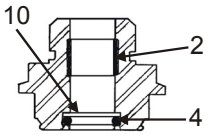

(3a) High Pressure adapter

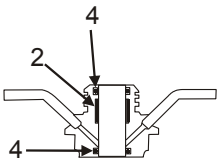

(3b) W885 Flush adapter

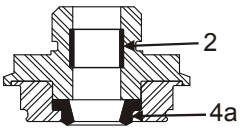

(3d) Wiping Stem Seal adapter

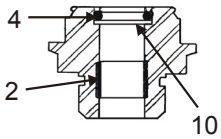

(11a) High Pressure adapter

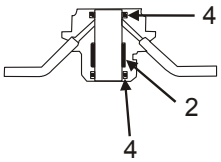

(11b) W885 Flush adapter

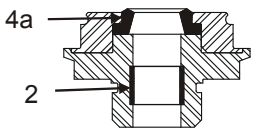

(11d) Wiping Stem Seal adapter

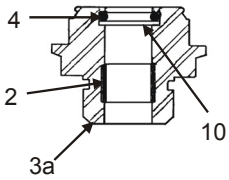

High Pressure adapter

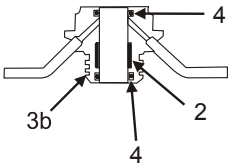

W885 Flush adapter

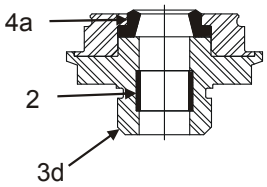

Wiping Stem Seal adapter

W685/W885 Divert Throttling Valve

NOTE: *For flow splitting/diverging flows only. Do not use for combining/converging flows - use W682/W882.*

	Item	Part Description		1" 25 mm	1-1/2" 40 mm	2" 50 mm	2-1/2" 65 mm	3" 80 mm	4" 100 mm	Notes
		Control Top		Contact Factory						
	1	Actuator		***						
*	**2**	**Bearing**		102757+	102757+	102757+	102757+	102757+	102757+	
	3	Adapter, Upper - W685 (Std.)		102406+	102406+	102407+	102408+	102409+	102410+	
	3a	Adapter, Upper - High Pressure	W685	109293+	109293+	109294+	109295+	N/A	N/A	
			W885	116925+	116925+	116926+	116927+	N/A	N/A	
	3b	Adapter, Upper - W885		106291+	106291+	106292+	106293+	106294+	106295+	2
	3d	Adapter, Upper - Wiping Stem Seal		117879+	117879+	117880+	117881+	117882+	117883+	1
*	**4**	**O-ring**	**EPDM**	E70210	E70210	E70210	E70210	E70210	E70210	
			FKM	V70210	V70210	V70210	V70210	V70210	V70210	
*	**4a**	**Wiping Stem Seal**	**EPDM**	116183+	116183+	116183+	116183+	116183+	116183+	1
			FKM	115626+	115626+	115626+	115626+	115626+	115626+	1
	5	Clamp	Standard	119-30	119-30	119-33	119-34	119-51	119-87	
			High Pressure	119-271	119-271	119-272	119-273	N/A	N/A	3
*	**6**	**O-ring, Body**	**EPDM**	E70223	E70223	E70228	E70232	E70236	E70244	
			FKM	V70223	V70223	V70228	V70232	V70236	V70244	
	7	Stem (metal seats standard) - see note 4, below.								4
*	**8**	**Seat Ring, Tri Ring**	**EPDM**	107692+	107692+	107695+	107048+	102488+	107698+	
			FKM	107983+	107983+	107986+	107982+	107974+	107989+	
*	**9**	**O-ring, Lower Stem**	**EPDM**	E70206	E70206	E70215	E70215	E70215	E70215	
			FKM	V70206	V70206	V70215	V70215	V70215	V70215	
	10	High Pressure Backup Ring		BURT210	BURT210	BURT210	BURT210	N/A	N/A	
	11	Adapter, Lower - W685 (Std.)		106329+	106239+	106240+	106241+	106242+	106243+	
	11a	Adapter, Lower - High Pressure	W685	103632+	103633+	103634+	103635+	N/A	N/A	
			W885	116930+	116931+	116932+	116933+	N/A	N/A	3
	11b	Adapter, Lower - W885		106328+	106296+	106297+	106298+	106299+	106300+	2
	11d	Adapter, Lower - Wiping Stem Seal		117979+	117980+	117981+	117982+	117983+	117984+	1

PL5027-CH143

Notes

* **Recommended Spare Parts**

*** See Actuator Parts Lists

1. Wiping Stem Seal Adapter and Wiping Stem Seal options are available for the W685 Series valves only.
2. W885 Adapter allows for liquid or steam flush of the stem o-ring only.
3. High Pressure Body Clamp is only required for valves equipped with High Pressure Adapters (items 3a and 11a)
4. For items 7a and 7b, see W685/W885 Valve Stems chart. Metal seats are standard.

Valve Stems

W68/W88 Valve Stems

Item #	Part Description		1-1/2"	2"	2-1/2"	3"	4"	Note
7	Stem (less seat ring)	Metal, Low Flow Plug	111653+	111657+	111661+	111665+	111669+	1
		Metal, High Flow Plug	111655+	111659+	111663+	111667+	111671+	1
		Tri Ring, Low Flow Plug	111654+	111658+	111662+	111666+	111670+	1
		Tri Ring, High Flow Plug	111656+	111660+	111664+	111668+	111672+	1

PL5027-CH59

W68/W88 (Reduced Orifice for C_V 1.75, 2.5, 5.0 and 7.5) Valve Stems

Item #	Part Description		1"	1-1/2"
7	Stem	Metal, C_V 1.75	114316+	114316+
		Metal, C_V 2.5	114317+	114317+
		Metal, C_V 5.0	114318+	114318+
		Metal, C_V 7.5	114319+	114319+

PL5027-CH65

W68R/W88R Valve Stems

Item #	Part Description		1-1/2"	2"	2-1/2"	3"	4"	Note
7	Stem (less seat ring)	Metal, Low Flow Plug	113686+	113690+	113694+	113698+	113702+	1
		Metal, High Flow Plug	113688+	113692+	113696+	113700+	113704+	1
		Tri Ring, Low Flow Plug	113687+	113691+	113695+	113699+	113703+	1
		Tri Ring, High Flow Plug	113689+	113693+	113697+	113701+	113705+	1

PL5027-CH92

Valve Stems

W682/W882 Valve Stems

Item #	Part Description		1-1/2"	2"	2-1/2"	3"	4"	Note
7	Stem (less seat ring)	Metal, Low Flow Plug	116995+	116804+	116999+	117003+	117007+	1
		Metal, High Flow Plug	116997+	116806+	117001+	117005+	117009+	1
		Tri Ring, Low Flow Plug	116996+	116805+	117000+	117004+	117008+	1
		Tri Ring, High Flow Plug	116998+	116807+	117002+	117006+	117010+	1

PL5027-CH94

W685/W885 Valve Stems

Item	Part Description		1"	1-1/2"	2"	2-1/2"	3"	4"	Note
7a	Stem, Upper (less seat ring)	Metal, Low Flow Plug	N/A	N/A	123897+	N/A	N/A	N/A	1
		Metal, High Flow Plug	N/A	N/A	N/A	126354+	126356+	124369+	1
		Tri Ring, Low Flow Plug	N/A	125949+	124731+	126228+	N/A	N/A	1
		Tri Ring, High Flow Plug	N/A	N/A	124055+	N/A	N/A	124999+	1
7b	Stem, Lower (less seat ring)	Metal, Low Flow Plug	N/A	N/A	123896+	N/A	N/A	N/A	1
		Metal, High Flow Plug	N/A	N/A	N/A	126355+	126357+	124372+	1
		Tri Ring, Low Flow Plug	N/A	125950+	124732+	126229+	N/A	N/A	1
		Tri Ring, High Flow Plug	N/A	N/A	124054+	N/A	N/A	125000+	1

PL5027-CH96

1. To find C_v values for both Low and High Flow Stems, refer to C_v Factor Chart in Valve Price Book PL5026 or DS1207 Single Seat Valve Key.
   Example: 2" Valve Stem with Low Flow Plug is Cv30 and High Flow Plug is Cv70.

W68/W88 Series Single Seat Valve Bodies

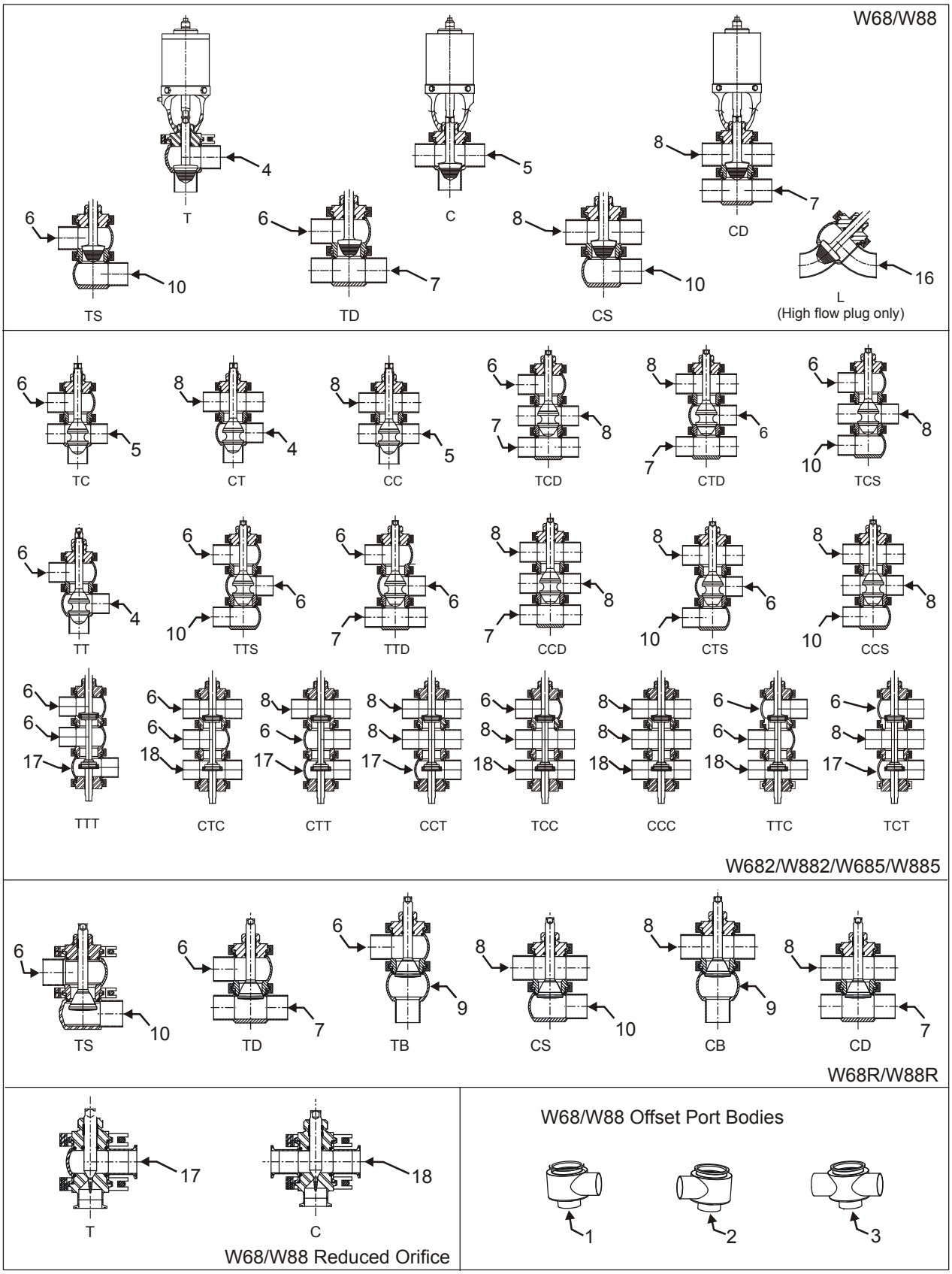

VA100-363a

W68/W88 Series Single Seat Valve Bodies

Item	Part Description		1"	1-1/2"	2"	2-1/2"	3"	4"	6" [1]
1	Tee, Offset Port - Right (TOPR)	Buttweld	108321+	108322+	108323+	108324+	108325+	108326+	116739+
		S-Line	108433+	108438+	108443+	108448+	108453+	108458+	POA
2	Tee, Offset Port - Left (TOPL)	Buttweld	108327+	108328+	108329+	108330+	108331+	108332+	116735+
		S-Line	108463+	108468+	108473+	108478+	108483+	108488+	118920+
3	Cross, Offset Port (COP)	Buttweld	108333+	108334+	108335+	108336+	108337+	108338+	POA
		S-Line	108493+	108498+	108503+	108508+	108513+	108518+	POA
4	Tee (T)	Buttweld	102400+	102401+	102402+	102403+	102404+	102405+	114296+
		S-Line	104143+	104147+	104151+	104155+	104159+	104163+	117205+
5	Cross (C)	Buttweld	102449+	102450+	102451+	102452+	102453+	102454+	114297+
		S-Line	104191+	104195+	104199+	104203+	104207+	104211+	POA
6	Upper Tee (T)	Buttweld	102144+	102145+	102146+	102147+	102148+	102149+	119245+
		S-Line	104167+	104171+	104175+	104179+	104183+	104187+	119247+
7	Double Side Port (D)	Buttweld	102785+	102786+	102787+	102788+	102789+	102790+	POA
		S-Line	104263+	104267+	104271+	104275+	104279+	104283+	POA
8	Upper Cross (C)	Buttweld	102455+	102456+	102457+	102458+	102459+	102460+	119246+
		S-Line	104215+	104219+	104223+	104227+	104231+	104235+	POA
9	Lower Bottom Port (B)	Buttweld	102779+	102780+	102781+	102782+	102783+	102784+	POA
		S-Line	104287+	104291+	104295+	104299+	104923+	104927+	POA
10	Single Side Port (S)	Buttweld	102773+	102774+	102775+	102776+	102777+	102778+	POA
		S-Line	104239+	104243+	104247+	104251+	104255+	104259+	POA
12	Tee, Port Short (TPS)	S-Line	111709+	111710+	111711+	111712+	109955+	111713+	POA
13	Cross, Port Short (CPS)	S-Line	112408+	112409+	112410+	112411+	112412+	112413+	POA
14	Cross, Manifold (CM)	Buttweld	105586+	105587+	105588+	105589+	105590+	105591+	POA
15	Tee, Manifold (TM)	Buttweld	105580+	105581+	105582+	105583+	105584+	105585+	POA
16	In-line Body (L)	Buttweld	107685+	107686+	107687+	107688+	107689+	107690+	POA
		S-Line	107702+	107706+	107710+	107714+	107718+	107722+	POA
17	Lower Tee (T)	Buttweld	106269+	106061+	106062+	106063+	106064+	106065+	124955+
		S-Line	106341+	106345+	106349+	106353+	106357+	106361+	POA
18	Lower Cross (C)	Buttweld	106270+	106262+	106263+	106264+	106265+	106266+	124956+
		S-Line	106365+	106369+	106373+	106377+	106381+	106385+	POA
19	Elbow Outlet (ET) [1]	S-Line	POA	POA	117906+	117907+	117908+	POA	POA
20	Y Body (Y) [1]	Buttweld	POA	POA	POA	121663+	121769+	121770+	POA
		S-Line	POA	POA	POA	119556+	119555+	119554+	POA

Notes: PL5027-CH20

1. Bodies and 6" sizes are not currently available for W68, W88 or W90 series.

POA: Contact Factory

4" and 5" Air-to-Spring or Air-to-Air Actuators

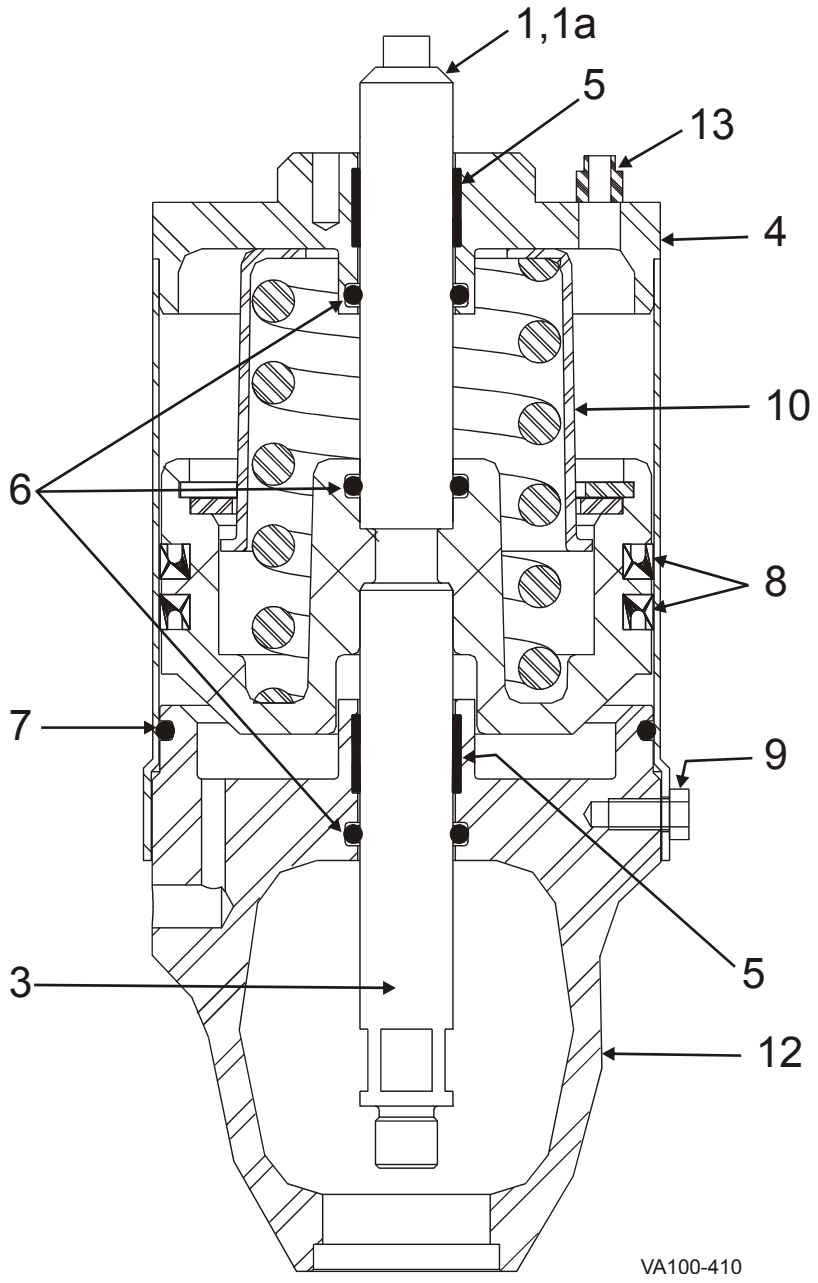

4" and 5" Air-to-Spring or Air-to-Air Actuators

	Item #	Part Description	4" Diameter (101 mm)	5" Diameter (127 mm)
	1	Indicator Stem - Visual	121007+	118937+
	1a	Indicator Stem - Control Top	118938+	118939+
	3	Stem, Lower	102141+	102134+
	4	Cylinder	102136+	102130+
*	**5**	**Bearing, Cylinder**	102757+	102757+
*	**6**	**O-ring Nitrile**	N70210	N70210
*	**7**	**O-ring, Cylinder Nitrile**	N70240	N70248
*	**8**	**Seal, U-cup**	57-15	120026+
	9	Cap Screw, 1/4-20 x .375" lg.	30-68	30-68
	10	Piston & Spring Assembly Standard Spring	118144+	118145+
		Heavy Duty Spring	118146+	118147+
		Air-to-Air (no spring)	118148+	118149+
	12	Yoke	102137+	102131+
	13	Vent Plug	3023957+	3023957+

Complete Actuator Assemblies

Part Description	Spring	4" Diameter (101 mm)	5" Diameter (127 mm)
Air-to-Raise Visual Indicator Stem	Standard	ACT00205	ACT00206
	Heavy Duty	ACT00207	ACT00208
Control Top Indicator Stem	Standard	ACT00215	ACT00216
	Heavy Duty	ACT00217	ACT00218
Air-to-Lower Visual Indicator Stem	Standard	ACT00209	ACT00210
	Heavy Duty	ACT00211	ACT00212
Control Top Indicator Stem	Standard	ACT00219	ACT00220
	Heavy Duty	ACT00221	ACT00222
Air-to-Air Visual Indicator Stem		ACT00213	ACT00214
Control Top Indicator Stem		ACT00223	ACT00224

PL5027-CH21

Notes

* **Recommended Spare Parts**

1. Air-to-Air is the same as Air-to-Raise without use of a spring.
   (part # 5900032+ on 4-inch (101 mm) actuator, part # 5900035+ on 5-inch (127 mm) actuator)

6" Air-to-Spring or Air-to-Air Actuators

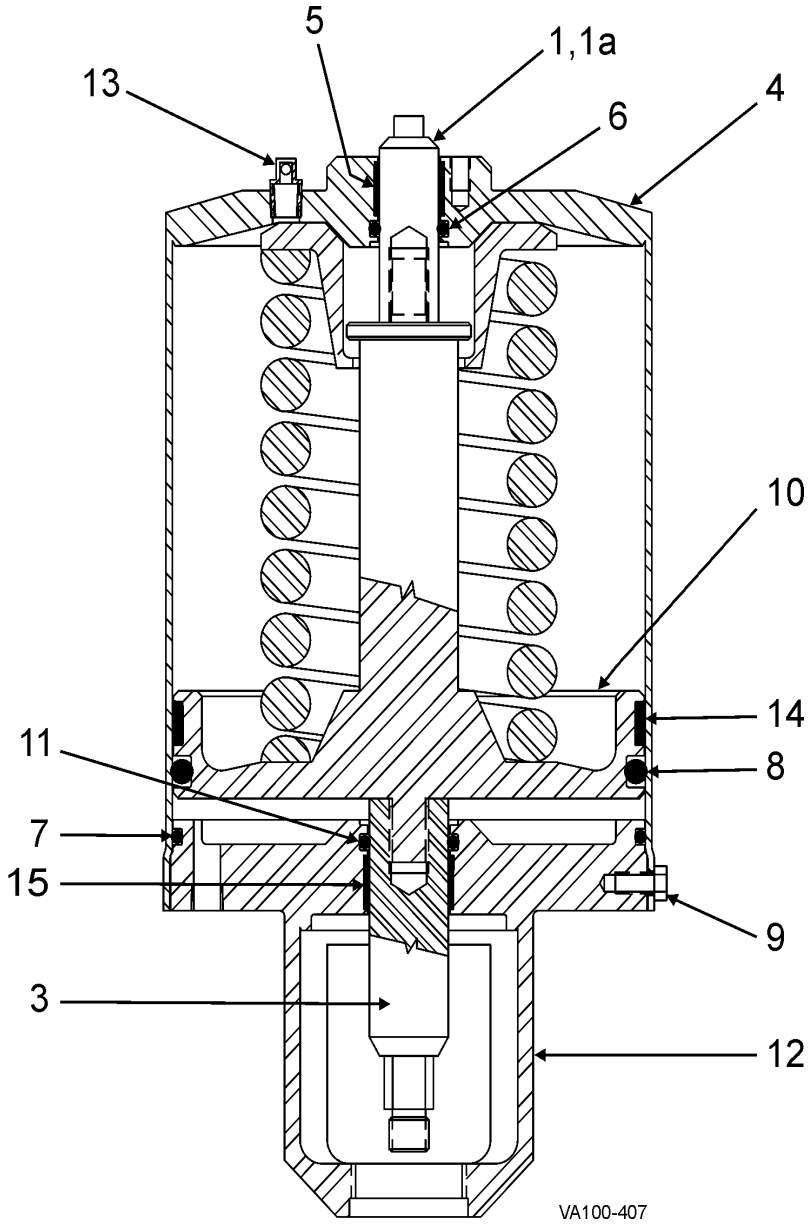

6" Air-to-Spring or Air-to-Air Actuators

	Item #	Part Description		6" (152 mm) Diameter
	1	Indicator Stem - Visual		108834+
	1a	Indicator Stem - Control Top		108830+
	3	Stem, Lower		108825+
	4	Cylinder		106007+
*	**5**	**Bearing, Cylinder**		102757+
*	**6**	**O-ring**	**Nitrile**	N70210
*	**7**	**O-ring, Cylinder**	**Nitrile**	N70255
*	**8**	**O-Ring, Piston**	**Nitrile**	N70433
	9	Cap Screw, 1/4-20 x .375" lg.		30-68
	10	Piston & Spring Assembly	Light Spring	110288+
			Standard Spring	108832+
			Air-to-Air (no spring)	118200+
*	**11**	**O-ring**	**Nitrile**	N70214
	12	Yoke		108827+
	13	Vent Plug		3023957+
*	**14**	**Bearing, Piston**		102052+
*	**15**	**Bearing, Yoke**		106047+

Complete Actuator Assemblies

Part Description		Spring	6" (152 mm) Diameter
Air-to-Raise	Visual Indicator Stem	Light	ACT00225
		Standard	ACT00226
	Control Top Indicator Stem	Light	ACT00227
		Standard	ACT00228
Air-to-Lower	Visual Indicator Stem	Light	ACT00229
		Standard	ACT00230
	Control Top Indicator Stem	Light	ACT00231
		Standard	ACT00232
Air-to-Air	Visual Indicator Stem		ACT00233
	Control Top Indicator Stem		ACT00234

PL5027-CH23

Notes

* **Recommended Spare Parts**

1. Air-to-Air is the same as Air-to-Raise without use of a spring.
2. This actuator is for W60/W80/W90 series valves.

4" Air-to-Raise 3-Position Actuator

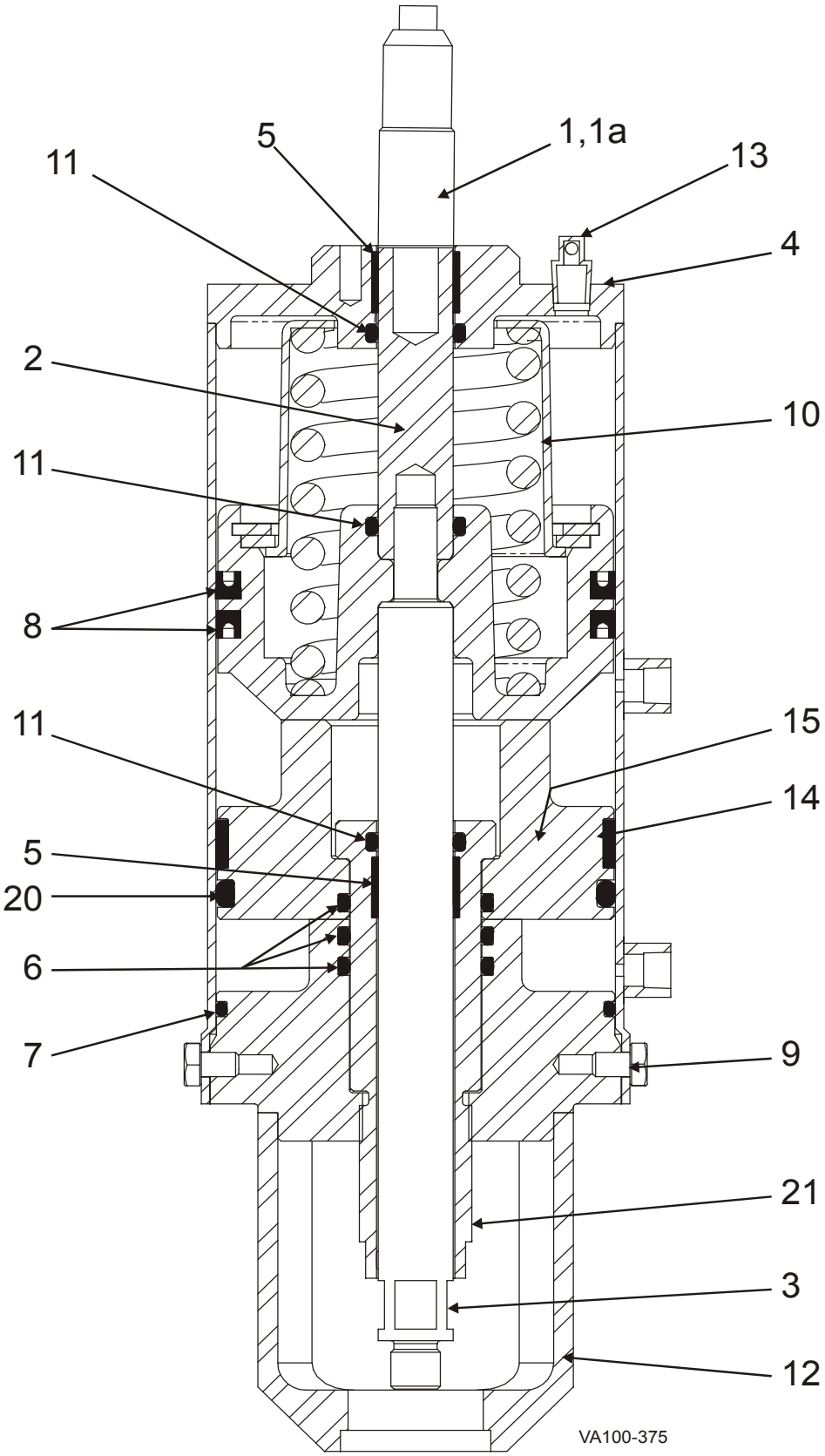

4" Air-to-Raise 3-Position Actuator

	Item #	Part Description		4" (101 mm) Diameter
	1	Indicator Stem - Visual		102143+
	1a	Indicator Stem - Control Top		118938+
	2	Stem, Upper		102142+
	3	Stem, Lower		114394+
	4	Cylinder		114388+
*	**5**	**Bearing**		102757+
*	**6**	**O-ring**	**Nitrile**	N70219
*	**7**	**O-ring, Cylinder**	**Nitrile**	N70240
*	**8**	**Seal, U-cup**		57-15
	9	Cap Screw, 1/4-20 x .375" lg.		30-68
	10	Piston & Spring Assembly		118144+
*	**11**	**O-ring**	**Nitrile**	N70210
	12	Yoke		114387+
	13	Vent Plug		3023957+
*	**14**	**Bearing, Piston**		101995+
	15	Piston, Lower		114391+
*	**20**	**O-ring, Lower Piston**	**Nitrile**	N70342
	21	Stem, Outer		114393+

Complete Actuator Assemblies

Part Description		4" (101 mm) Diameter
Air-to-Raise	Visual Indicator Stem	ACT00127
	Control Top Indicator Stem	ACT00254

PL5027-CH29

* **Recommended Spare Parts**

4" Air-to-Lower 3-Position Actuator

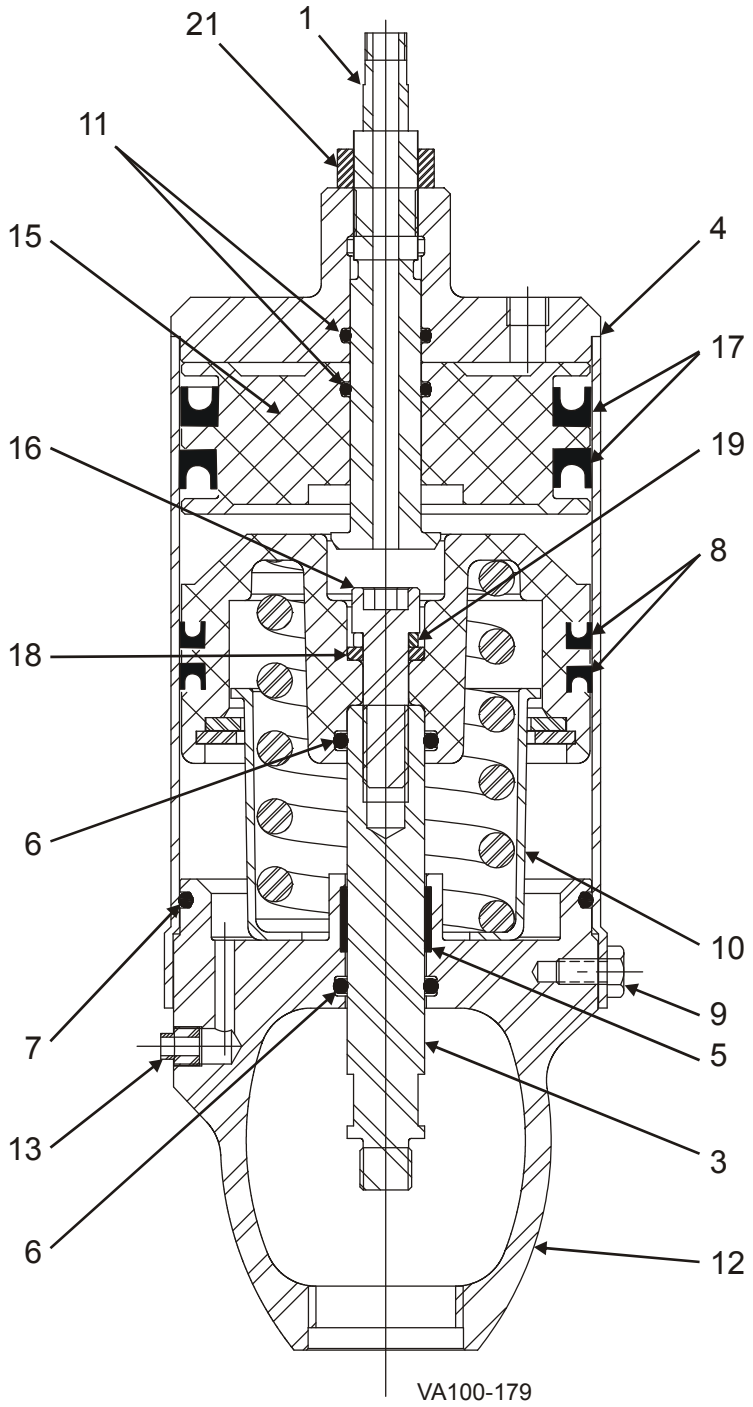

4" Air-to-Lower 3-Position Actuator

	Item #	Part Description	4" (101 mm) Diameter
	1	Stop, Adjustable	45417+
	3	Stem, Lower	105793+
	4	Cylinder	105794+
*	**5**	**Bearing, Yoke**	102757+
*	**6**	**O-ring Nitrile**	N70210
*	**7**	**O-ring, Cylinder Nitrile**	N70240
*	**8**	**Seal, U-cup - Main Piston**	57-15
	9	Cap Screw, 1/4-20 x .375" lg.	30-68
	10	Piston & Spring Assembly	118144+
*	**11**	**O-ring Nitrile**	N70115
	12	Yoke	102137+
	13	Vent Plug	3023957+
	15	Piston, Upper	70162+
	16	Cap Screw, 7/16-14 x 1.5"	30-332
*	**17**	**Seal, U-cup - Upper Piston**	57-11
	18	Washer	3023961+
	19	Lock Washer	9570210+
	21	Hex Jam Nut	36-79

Complete Actuator Assemblies

Air-to-Lower	105792+

PL5027-CH31

*** Recommended Spare Parts**

Moore Positioner Actuator

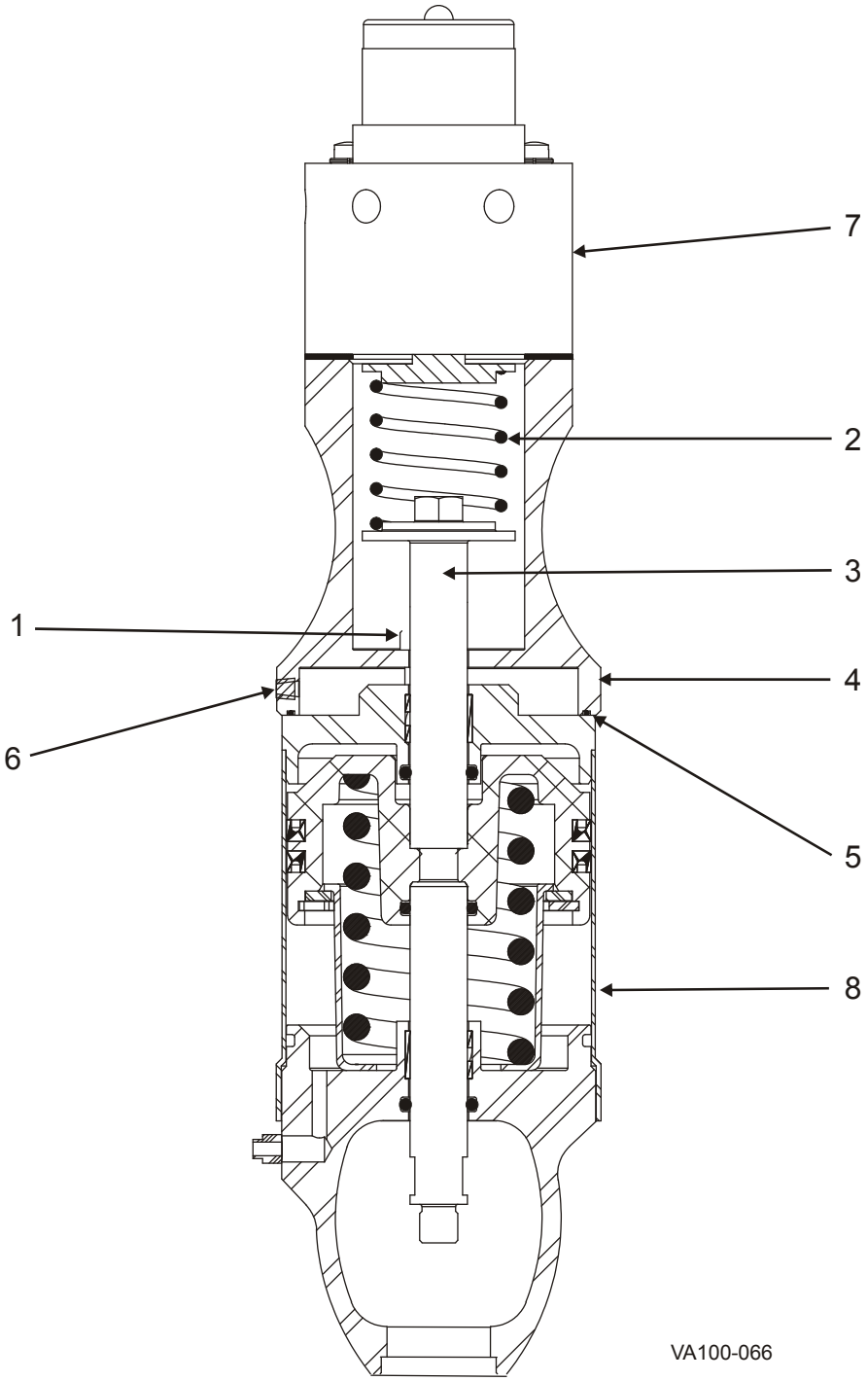

Moore Positioner Actuator

	Item #	Part Description	Part #	Notes
	1	Cap Screw, Socket head	30-628	
	2	Spring, Range	111675+	
		for W682/W882/W685/W885 Series only	116811+	
		for W90 Series only	124087+	
	3	Stem, Range Spring 4" Actuators	119394+	
		5" Actuators	119395+	
		6" Actuators	119396+	
	4	Adapter	111673+	
*	**5**	**O-ring, Adapter - Outer Nitrile**	N70044	
*	**6**	**Plug (Air-to-Lower Actuators only)**	78-73	
	7	Moore Positioner Air-to-Raise Actuator	17-1	2
		Air-to-Lower Actuator	17-2	2
	8	Actuator	-	1

Complete Positioner Assemblies (see notes 1 & 2)

Air-to-Raise (4" diameter actuator)	ACT00067
Air-to-Lower (4" diameter actuator)	ACT00066
Air-to-Raise (5" diameter actuator)	ACT00576
Air-to-Lower (5" diameter actuator)	ACT00575
Air-to-Raise (6" diameter actuator)	ACT00289
Air-to-Lower (6" diameter actuator)	ACT00514

PL5027-CH33

* **Recommended Spare Parts**

1. Complete assemblies include all parts listed above, less actuator. Actuator sold separately.
2. Direct-acting style shown; for reverse-acting, contact factory.

5" Air-to-Lower Diaphragm Actuator

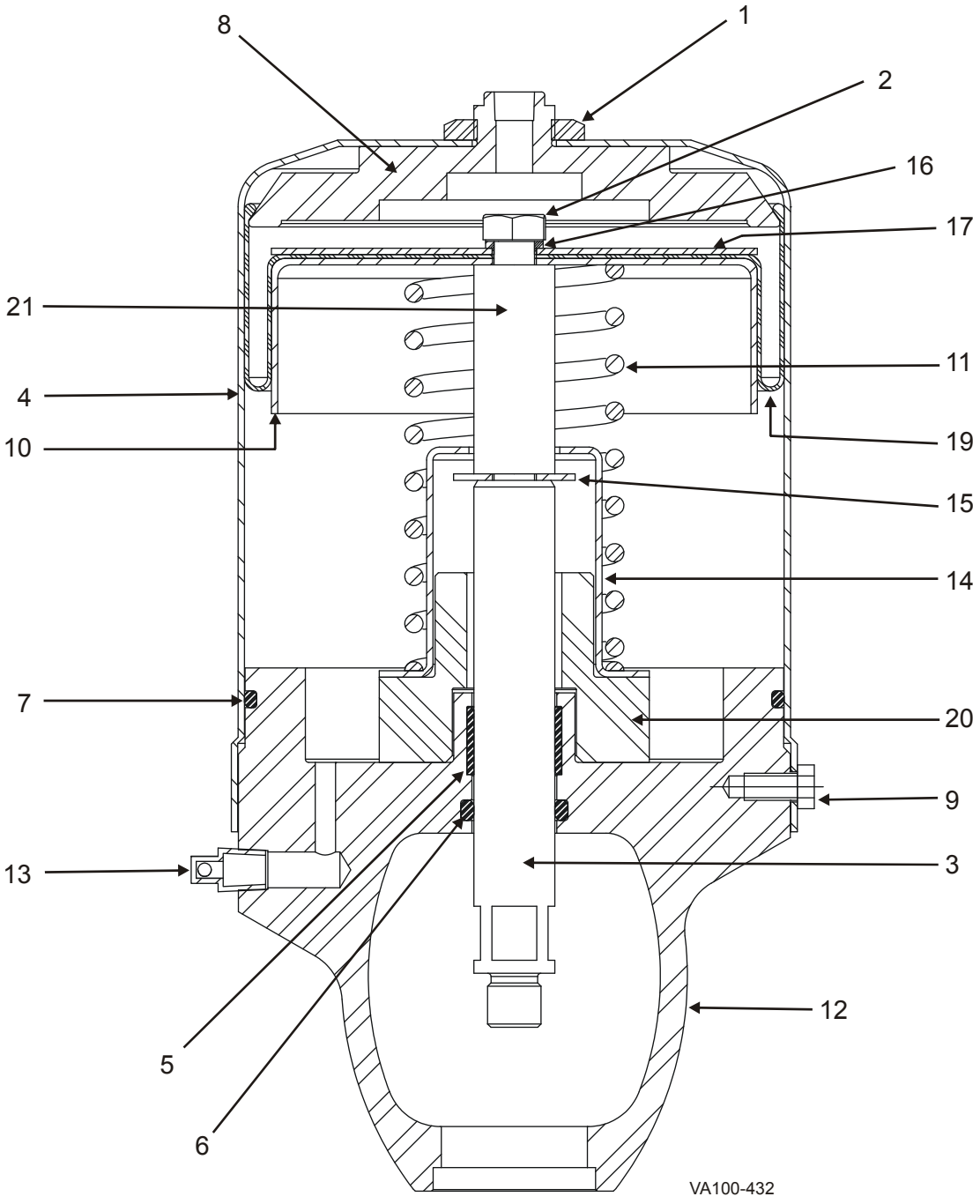

5" Air-to-Lower Diaphragm Actuator

	Item #	Part Description	5" Diameter
	1	Hex Nut, .75"-16 special	36-60
	2	HHCS 3/8-16 x 3", 18-8 SS	30-179
	3	Stem, Lower	117650+
	4	Cylinder	3026637+
*	**5**	**Bearing, Yoke**	102757+
*	**6**	**O-ring Nitrile**	N70210
*	**7**	**O-ring, Cylinder Nitrile**	N70248
	8	Diaphragm holder	3026580+
	9	Cap Screw, 1/4-20 x .375" lg.	30-68
	10	Piston	3026578+
	11	Spring	5901477+
	12	Yoke	102131+
	13	Vent Plug	3023957+
	14	Retainer, Spring	3026563+
	15	Washer	3026576+
	16	Washer	5900053+
	17	Retainer, Diaphragm	3026577+
*	**19**	**Diaphragm**	3026635+
	20	Spacer	117651+
	21	Spacer	3026574+

*** Recommended Spare Parts**

Complete Actuator Assemblies

Air-to-Lower	117652+

PL5027-CH35

5" Air-to-Lower Diaphragm Actuator with Moore Positioner

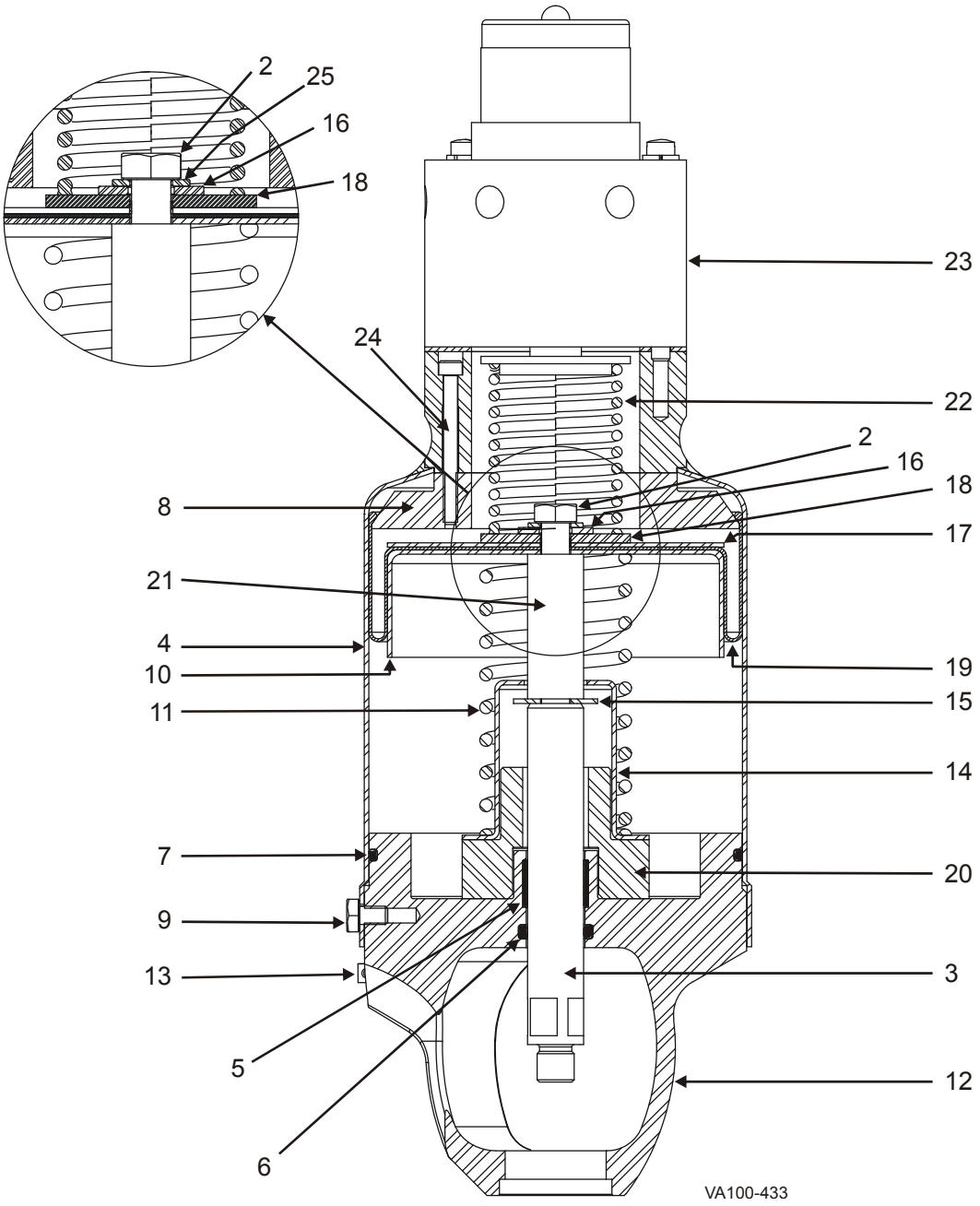

5" Air-to-Lower Diaphragm Actuator with Moore Positioner

	Item #	Part Description		5" Diameter
	2	HHCS 3/8-16 x 3.25", 18-8 SS		30-208
	3	Stem, Lower		117650+
	4	Cylinder		3026629+
*	**5**	**Bearing, Yoke**		102757+
*	**6**	**O-ring**	**Nitrile**	N70210
*	**7**	**O-ring, Cylinder**	**Nitrile**	N70248
	8	Diaphragm holder		3026631+
	9	Cap Screw, 1/4-20 x .375" lg.		30-68
	10	Piston		3026578+
	11	Spring		5901477+
	12	Yoke		102131+
	13	Vent Plug		3023957+
	14	Retainer, Spring		3026563+
	15	Washer		3026576+
	16	Washer		43-127
	17	Retainer, Diaphragm		3026577+
*	**19**	**Diaphragm**		3026635+
	20	Spacer		117651+
	21	Spacer		3026574+
	22	Spring, Range		111675+
	23	Positioner	Direct Acting	17-2
			Reverse Acting	17-22
	24	Cap Screw, 10-24 x 2" lg.		30-205
	25	Washer		43-154

* **Recommended Spare Parts**

Complete Actuator Assemblies

Air-to-Lower	Direct Acting Positioner	117660+
	Reverse Acting Positioner	117663+

PL5027-CH37

Electropneumatic Positioner

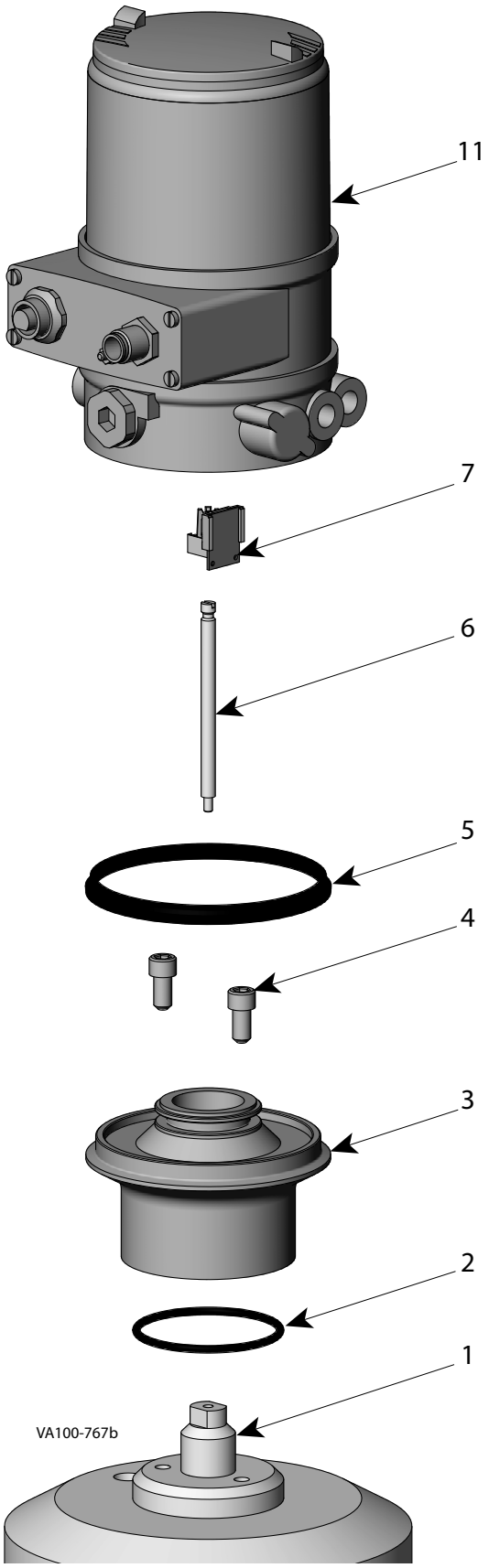

Electropneumatic Positioner

Item #	Part Description	Part No.	Qty	Notes
1	WCB Indicator Stem 4" Actuator - Bürkert 8692	130980+	1	1
	5" Actuator - Bürkert 8692	130981+		
	6" Actuator - Bürkert 8692	130982+		
2	O-Ring	N70135	1	1
3	Adapter	130939+	1	1
4	Screws	119625+	2	1
5	Gasket	131100+	1	1
6	Positioner Stem	129816-4	1	1
7	Sensor Puck	129816-1	1	1
11	Control Top / Positioner 8692 Single Acting, No Bus	131091+	1	2
	8692 Double Acting, No Bus	131092+		2
	8692 Single Acting, w/DeviceNet	131093+		3
	8692 Double Acting, w/DeviceNet	131094+		3
	8694 Single Acting, w/AS-I	131095+		4
N/S	G 1/8" Silencer	131101+	1	1
N/S	G 1/8" Male x 1/8" FNPT Nickel-Plated Brass	131102+	1	1
N/S	G 1/8" Plug	H320482	1	1
N/S	G 1/8" Elbow x 1/4" Poly Tube	H312732	1	1
N/S	M12 4-Pin Connector with 5-meter cable (for No Bus and Device Net)	131103+	A/R	2,3
N/S	M12 8-Pin Connector with 2-meter cable (for No Bus only)	131104+	A/R	2
N/S	M12 5-Pin Connector with 2-meter cable (for Device Net only)	131105+	A/R	3

Adapter Kits for Bürkert Positioner to WCB Actuator

Part Description	Part No.	Qty	Notes
4" Adapter kit: Bürkert 8692/8694 Positioner to 4" WCB Single-Seat Actuator	131640+	A/R	1
5" Adapter kit: Bürkert 8692/8694 Positioner to 5" WCB Single-Seat Actuator	131641+	A/R	1
6" Adapter kit: Bürkert 8692/8694 Positioner to 6" WCB Single-Seat Actuator	131642+	A/R	1

Notes PL5027-CH165

1. All parts needed to connect the positioner (item 11) to the actuator are available in kit form. See Adapter Kits table.
2. Cables for No Bus positioner are 131103+ and 131104+. Not supplied with positioner, but can be ordered separately from SPX (or other source).
3. Cables for DeviceNet positioner are: 131103+ and 131105+. Not supplied with positioner, but can be ordered separately from SPX (or other source).
4. AS-I Positioner is supplied with a 1-meter flat cable clip.

A/R = As Required
N/S = Not Shown
This adapter design was changed in February of 2012. For information on positioners and adapter kits ordered prior to this, please contact the factory.

Hand Lock Manual Handle

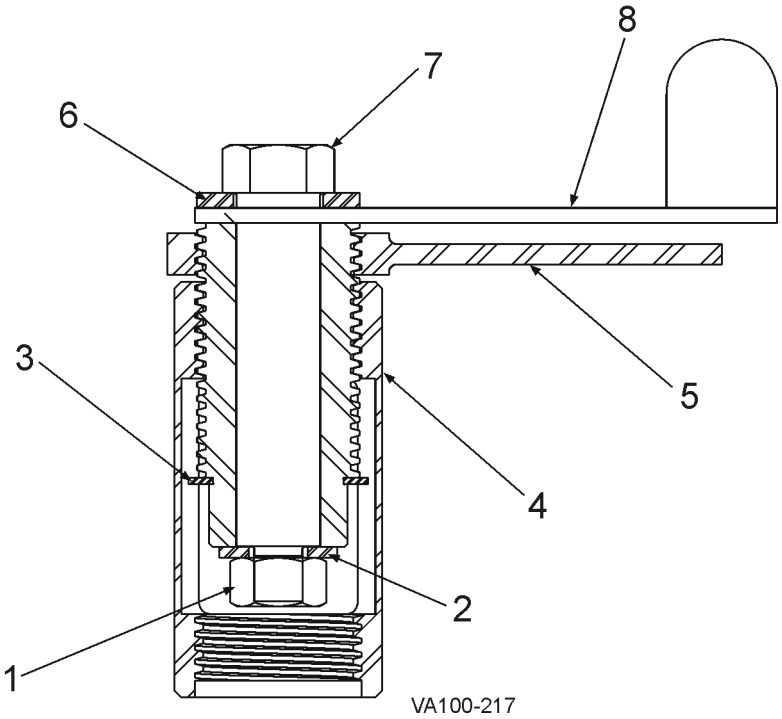

Item #	Part Description	Part No.
	Actuator Assembly	105167+
1	Hex Nut [1]	36-54
2	Plane Washer	43-31
3	Retaining Ring	2104600+
4	Nut-Adjusting	2098700+
5	Locknut with Handle	36-50
6	Plain Washer	43-55
7	Stem - Manual Actuator	105168+
8	Adjusting Screw Assembly	105170+

PL5027-CH39

Notes

1. The hex nut is only used for shipping. The hex nut is not used when the actuator is installed on a valve.

Micrometer Handle

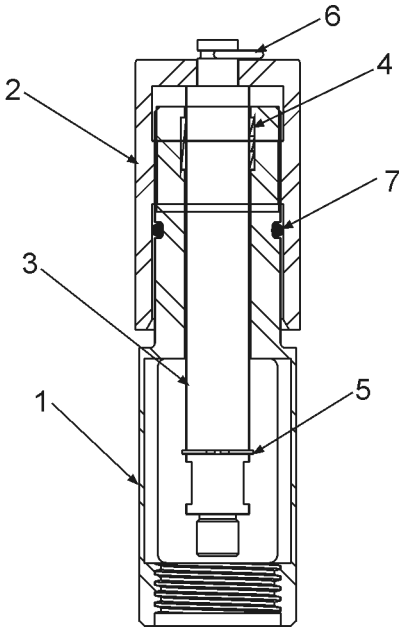

VA100-218

Item #	Part Description	Part No.
	Actuator Assembly	112884+
1	Yoke	112881+
2	Handle	112882+
3	Stem	112883+
4	Bearing	102757+
5	Retaining Ring	113163+
6	Clip	65-1
7	O-Ring, PTFE Coated	9-40

PL5027-CH41

Notes

1. When the micrometer handle assembly is ordered as loose component, a vernier scale is not acid-etched on the handle and body.

Optional Tools

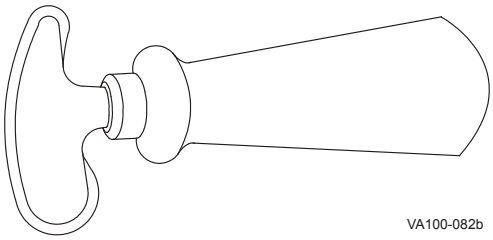

VA100-082b

Tri Ring Tool	102797+

PL5027-CH85

Troubleshooting

PROBLEM	POSSIBLE CAUSE	SUGGESTED ACTION
Leakage		
Product leaks through closed valve	Trapped debris	Inspect and remove any foreign materials. Change cleaning procedure to prevent future problems.
	Seat ring failure	Remove valve from service and replace seat ring.
Leakage around yoke	Internal adapter o-ring failure	Replace o-ring.
	External adapter o-ring failure	Replace o-ring.
Operation		
Valve fails to open	Air pressure too low	Set air pressure to 60 psi (4 Bar) for 4”, 5” and 6” light spring actuator. Set air pressure to 80 psi for 6” standard spring actuator.
	Control failure	Check control sequence. Check control wiring and power source.
Valve fails to close	Control failure	Check control sequence. Check air supply. Check for loose stems. Check control wiring and power source.
Actuator moves when valve opened	Clamp loose	Tighten clamp with valve open.
	Yoke loose	Tighten yoke to adapter by turning actuator.

W68 and W88 Series

THROTTLING/PRESSURE CONTROL VALVES

SPX
WHERE IDEAS MEET INDUSTRY

THE WILLIAMS - CARVER COMPANY, INC.
4001 MISSION RD P.O. BOX #3140
KANSAS CITY, KS 66103-0140
Office (913) 236-4949 Fax (913) 236-9331
www.williamscarver.com

SPX FLOW TECHNOLOGY
611 Sugar Creek Road
Delavan, WI 53115
P: (262) 728-1900 or (800) 252-5200
F: (262) 728-4904 or (800) 252-5012
E: wcb@spx.com

ISSUED: 02/2013